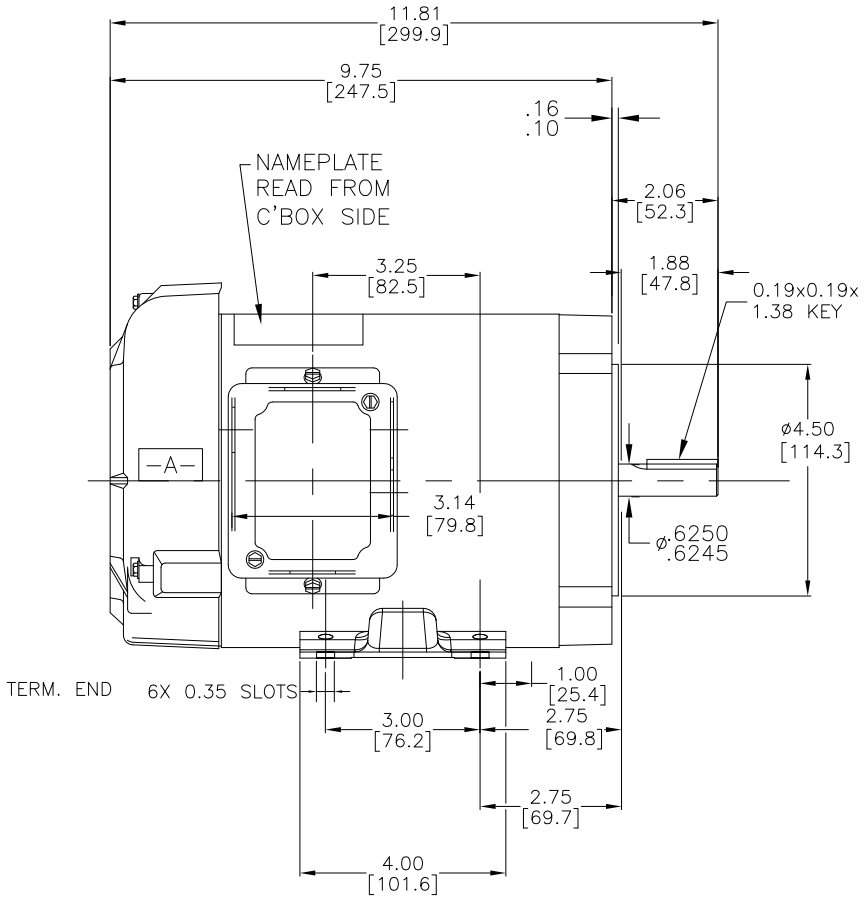

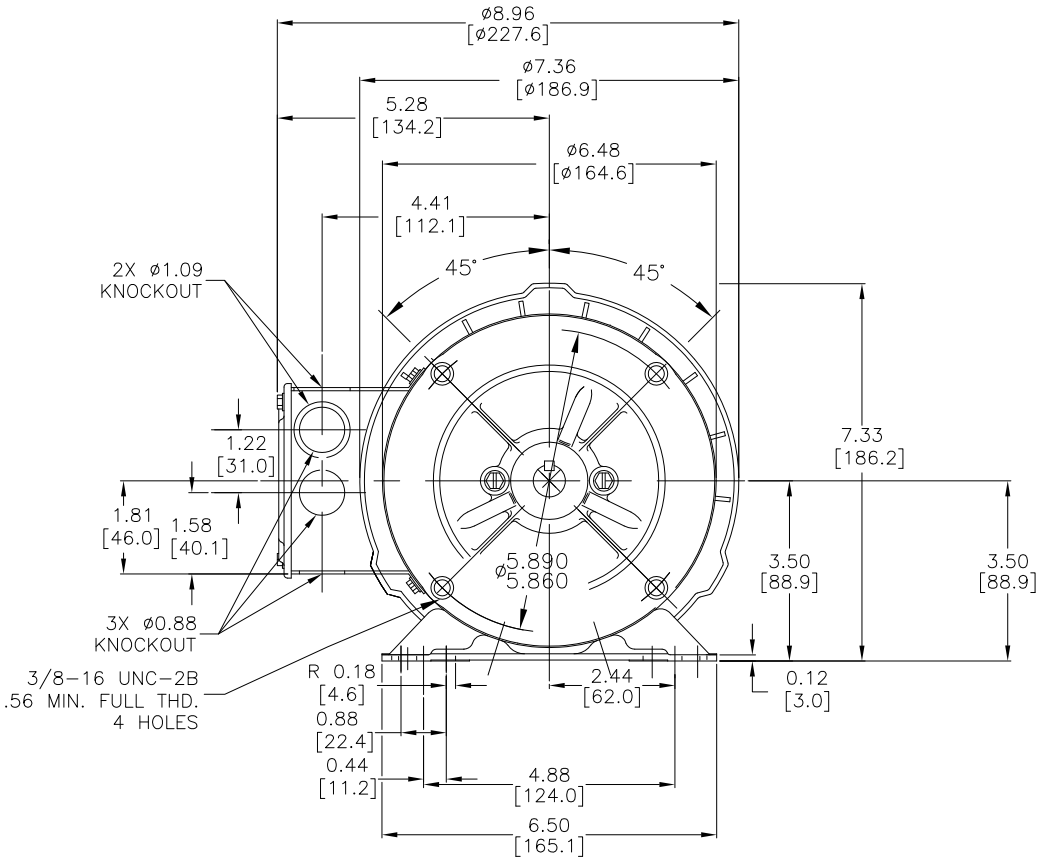

NOTES:

1. DIMENSIONS CAN BE CHANGED BY MANUFACTURER WITHOUT NOTICE.
2. DIMENSIONS DO NOT IMPLY TOLERANCE.

K708A

Units: inches [mm]

Scale: Full

MARATHON GENERAL PURPOSE AND INVERTER DUTY MOTOR, 4-in-1
1 HP, 3-PH, 575 VAC, 3600 RPM,
TEFC, 56C FRAME

AUTOMATIONDIRECT.com