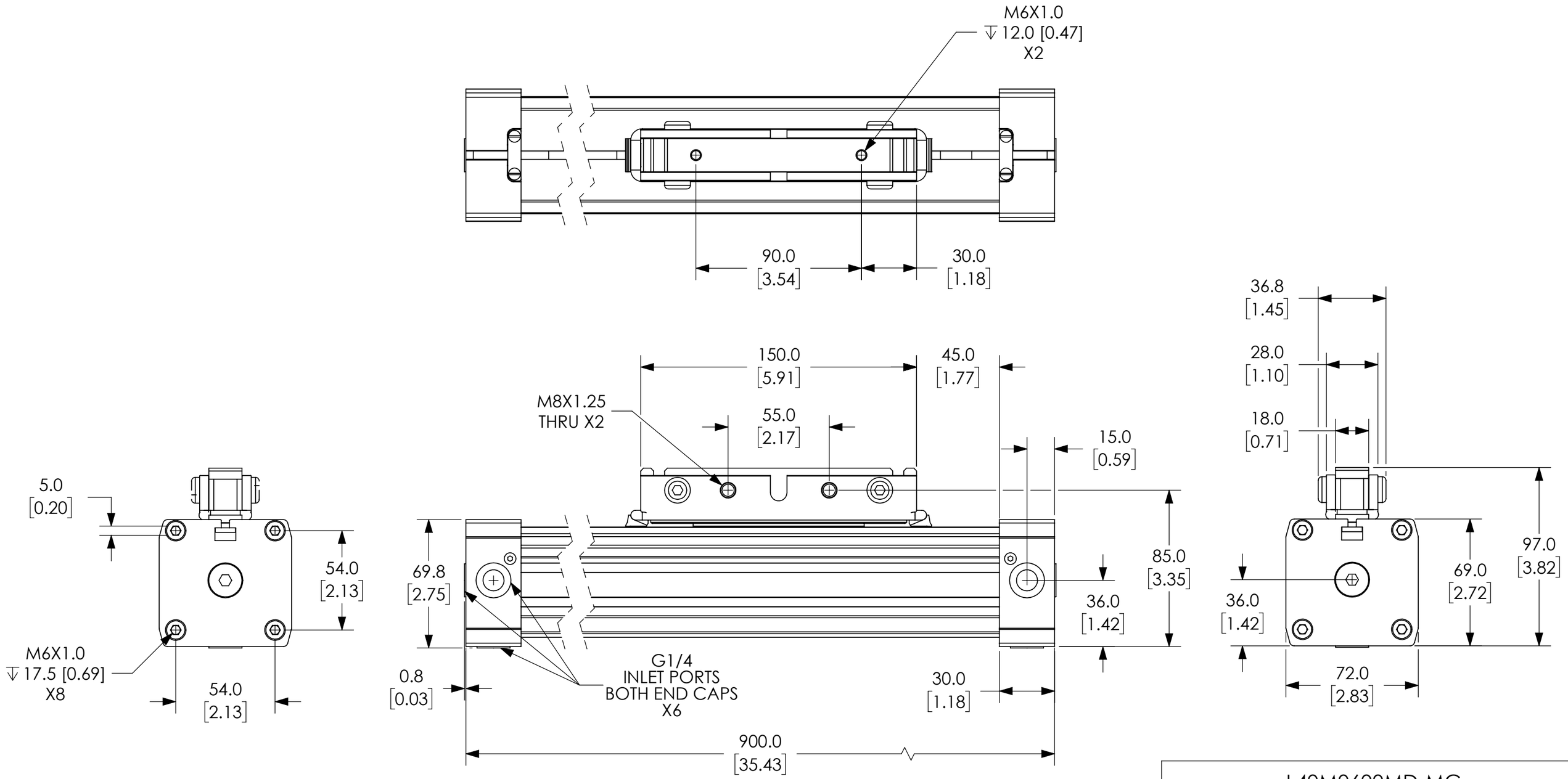

L40M0600MD-MC

Units: mm [inches]
Scale: Full

PNEUMATIC CYLINDER: RODLESS,
40MM BORE, 600MM STROKE

AUTOMATIONDIRECT.com

NOTES:

1. DIMENSIONS CAN BE CHANGED BY MANUFACTURER WITHOUT NOTICE.
2. DIMENSIONS DO NOT IMPLY TOLERANCE.