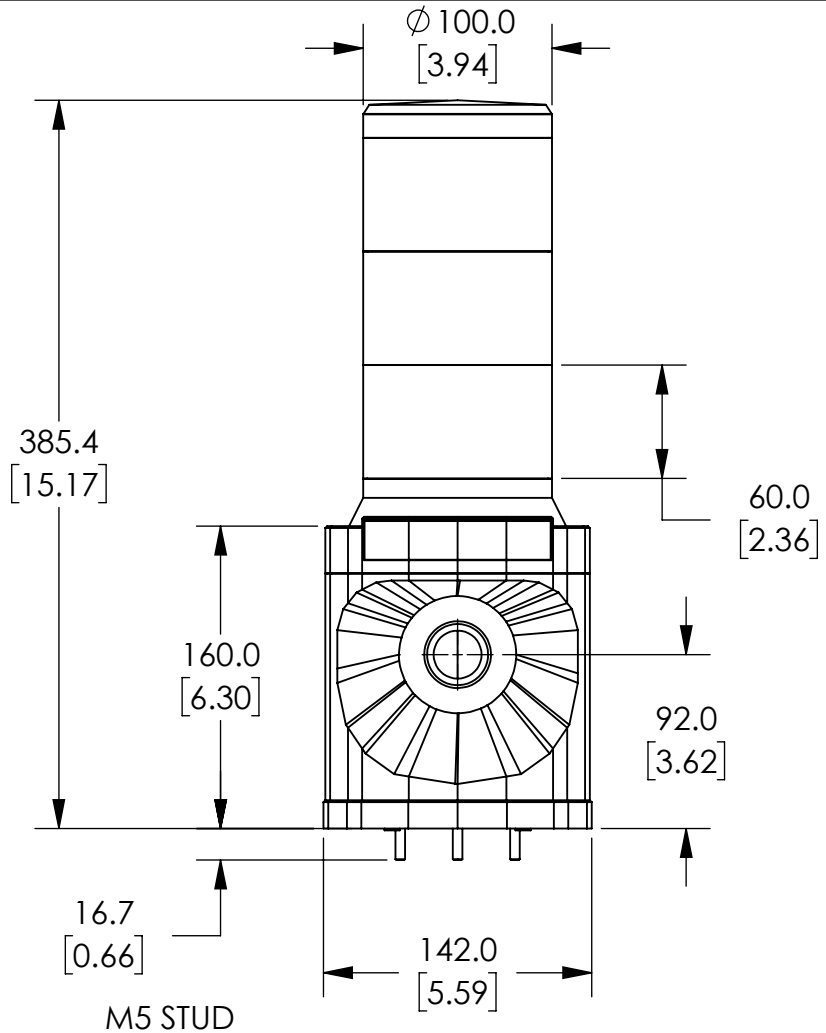


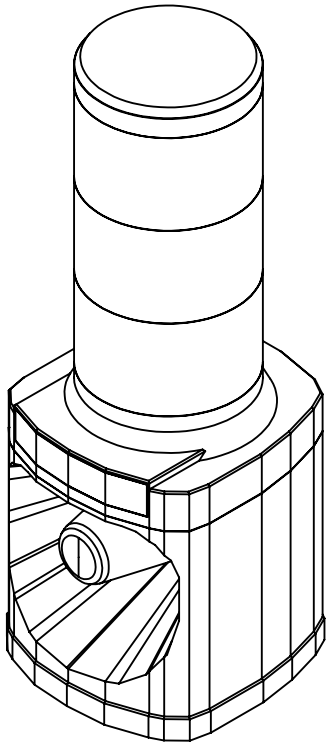

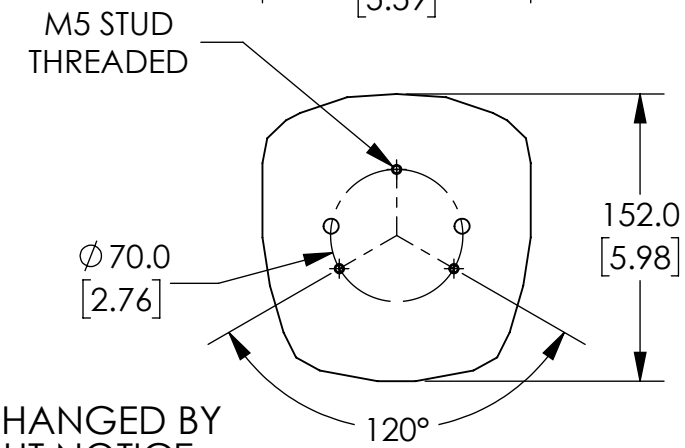


NOTES:

1. DIMENSIONS CAN BE CHANGED BY MANUFACTURER WITHOUT NOTICE.

2. DIMENSIONS DO NOT IMPLY TOLERANCE.

LKEH-302FEPUL-RYG

Units: mm [inch]
Scale: Full

SIGNAL TOWER - 3-TIER

AUTOMATIONDIRECT.com