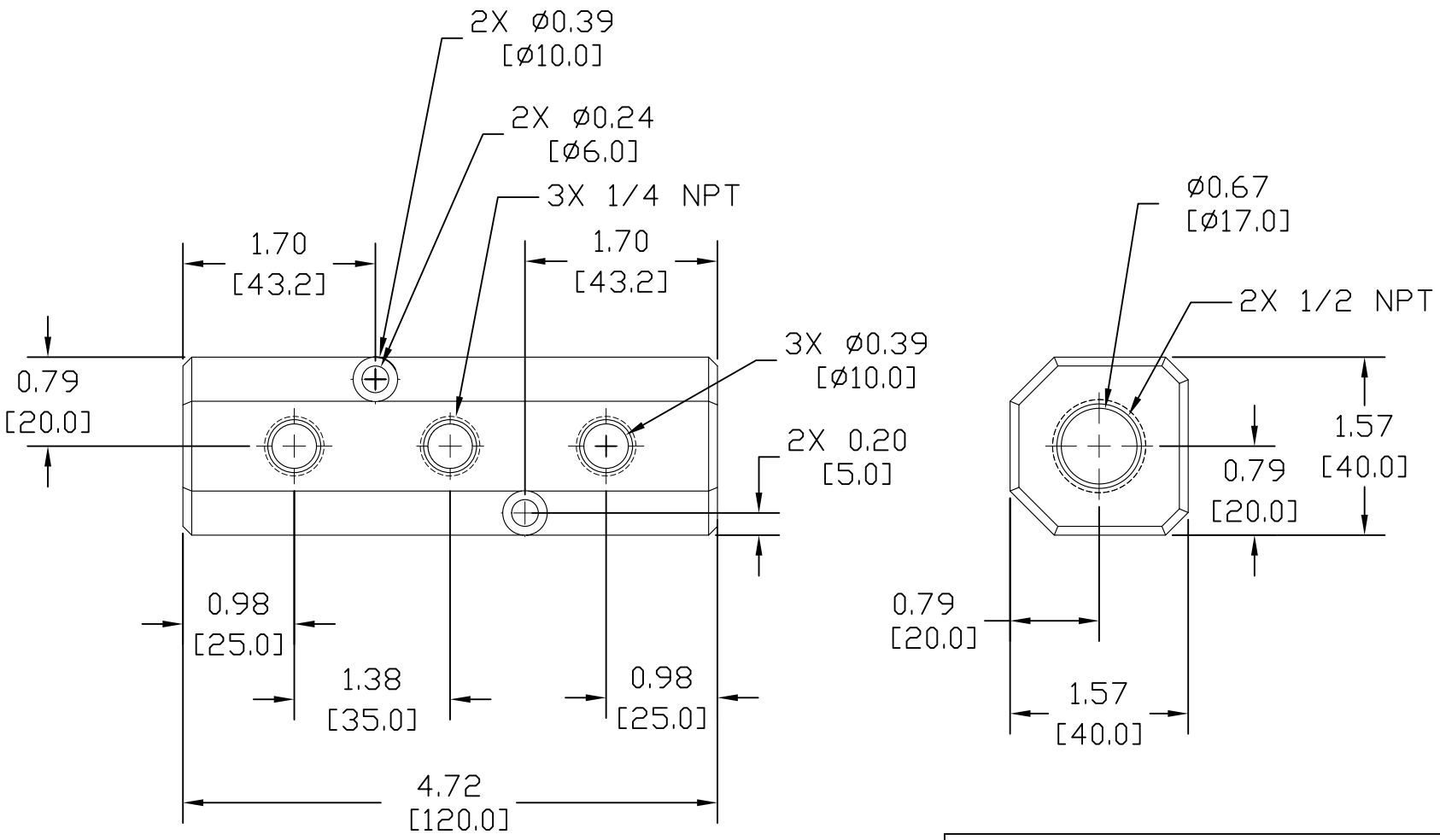

MLA-3

Units: inches [mm]

Scale: Full 1:1

MANIFOLD ALUMINUM RECTANGLE
1/2 INCH FNPT INLET
3 - 1/4 INCH FNPT OUTLETS

AUTOMATIONDIRECT.com