MS (mm)

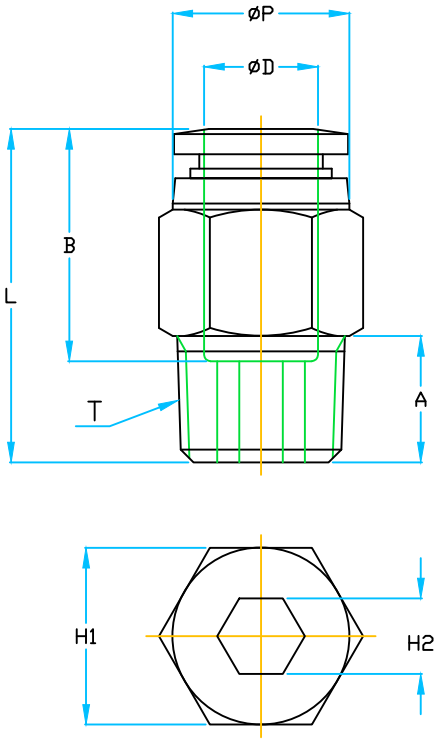

MODEL	øD	øP	T	L	A	B	H1 (Hex)	H2 (Hex)	ORIFICE	WEIGHT (g)
MS4M–M5	4	10.0	M5*0.8p	20.8	4.0	14.7	10	–	2.5	7.0
MS4M–18R	4	10.0	R 1/8	21.9	8.0	14.7	10	3	3.5	9.0
MS4M–14R	4	10.0	R 1/4	20.9	10.0	14.7	14	3	3.5	16.0
MS6M–M5	6	12.0	M5*0.8p	23.1	4.0	16.4	12	–	2.5	10.0
MS6M–18R	6	12.0	R 1/8	22.4	8.0	16.4	12	4	5.0	10.0
MS6M–14R	6	12.0	R 1/4	21.9	10.0	16.4	14	5	5.0	14.0
MS6M–38R	6	12.0	R 3/8	22.9	11.0	16.4	17	5	5.0	25.0
MS8M–18R	8	14.0	R 1/8	28.4	8.0	18.4	14	5	6.0	15.0
MS8M–14R	8	14.0	R 1/4	26.4	10.0	18.4	14	6	7.0	16.0
MS8M–38R	8	14.0	R 3/8	23.9	11.0	18.4	17	6	7.0	24.0
MS8M–12R	8	14.0	R 1/2	29.4	14.0	18.4	19	6	7.0	49.0
MS10M–18R	10	16.1	R 1/8	29.8	8.0	19.6	17	5	6.0	21.0
MS10M–14R	10	16.1	R 1/4	31.3	10.0	19.6	17	6	7.0	24.0
MS10M–38R	10	16.1	R 3/8	27.4	11.0	19.6	17	8	8.0	24.0
MS10M–12R	10	16.1	R 1/2	29.8	14.0	19.6	19	8	8.0	45.0
MS12M–14R	12	19.0	R 1/4	33.7	10.0	21.9	19	6	8.0	30.0
MS12M–38R	12	19.0	R 3/8	30.7	11.0	21.9	19	8	10.0	29.0
MS12M–12R	12	19.0	R 1/2	30.2	14.0	21.9	19	8	10.0	38.0

M S

Units: mm
Scale: Full

NITRA
Male Straight

AUTOMATIONDIRECT.com