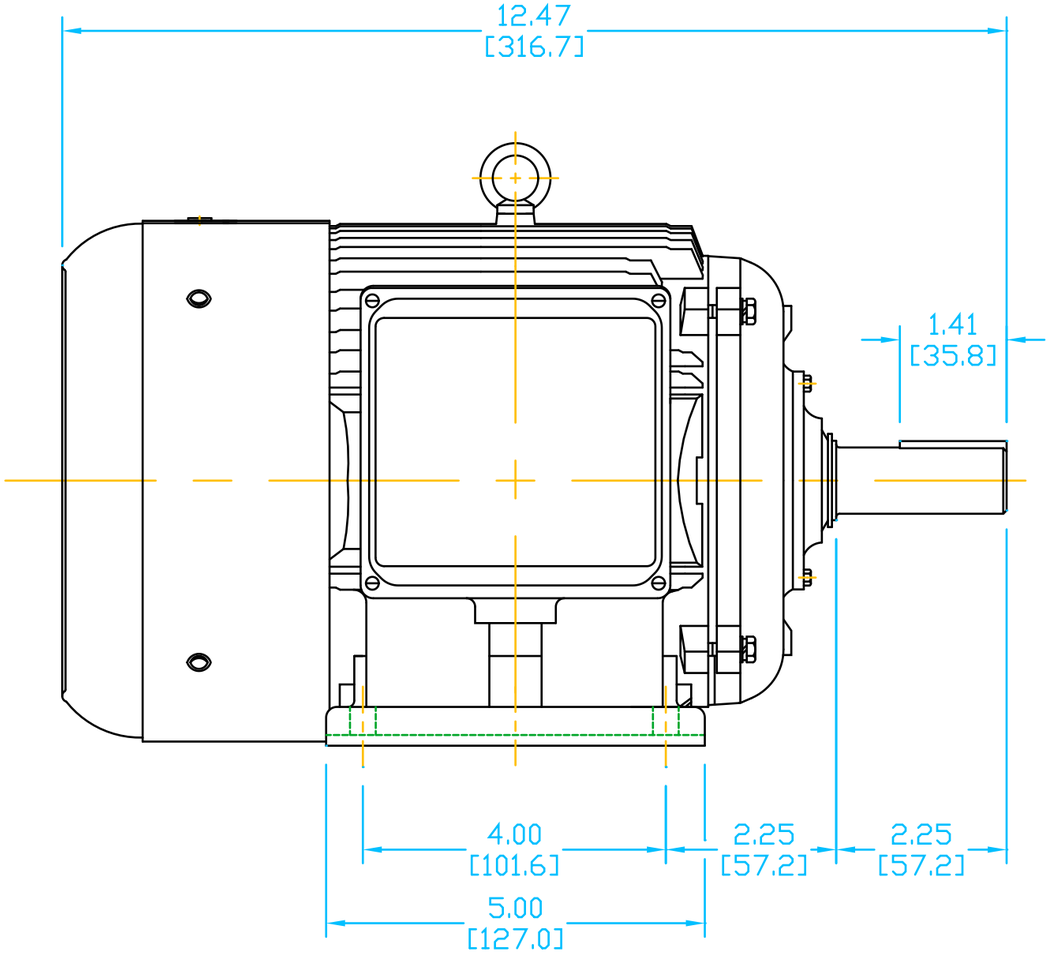

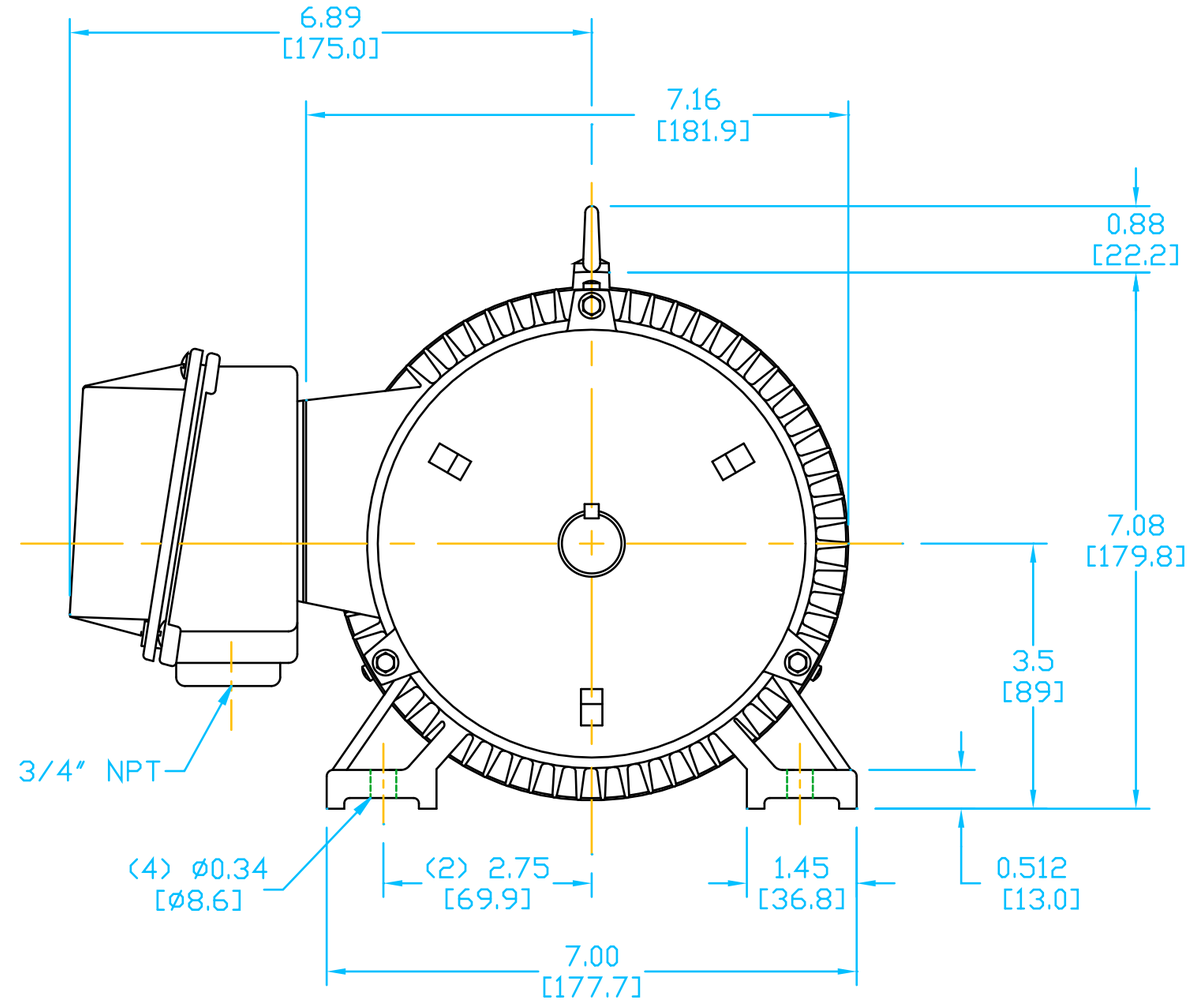

OUTPUT SHAFT DETAIL

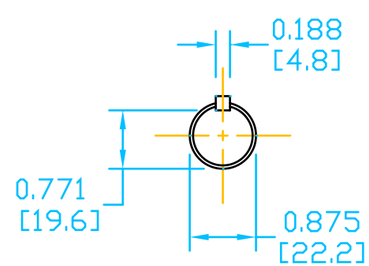

AUTOMATIONDIRECT.com