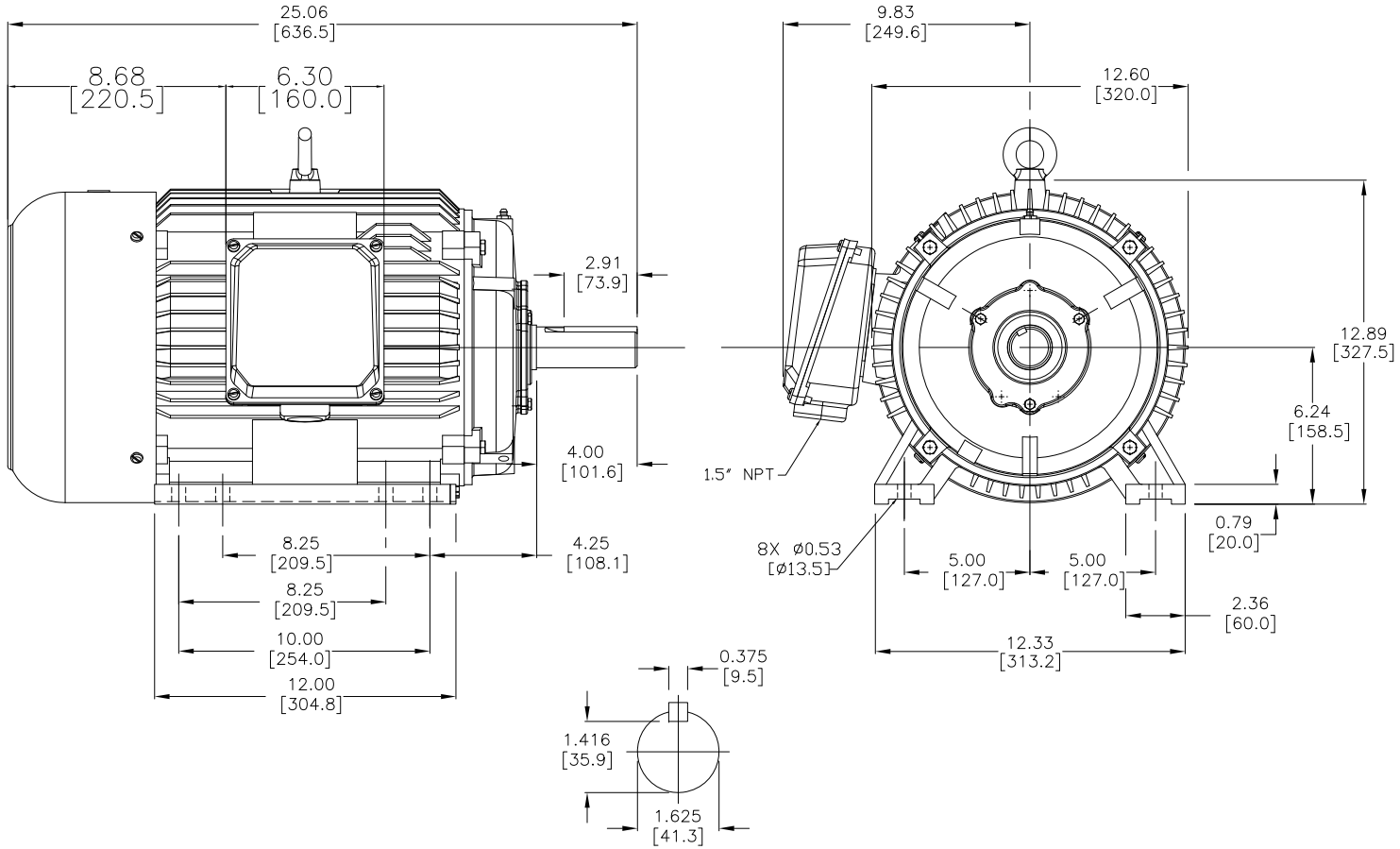

OUTPUT SHAFT DETAIL SCALE 2/1

NOTES:

1. DIMENSIONS CAN BE CHANGED BY MANUFACTURER WITHOUT NOTICE.
2. DIMENSIONS DO NOT IMPLY TOLERANCE.

MTCP-010-3BD12

Units: inches [mm]

Scale: Full

AC MOTOR, 10HP,
1200RPM, 208-230/460V, 3PH,
256T FRAME, CAST IRON

AUTOMATIONDIRECT.com