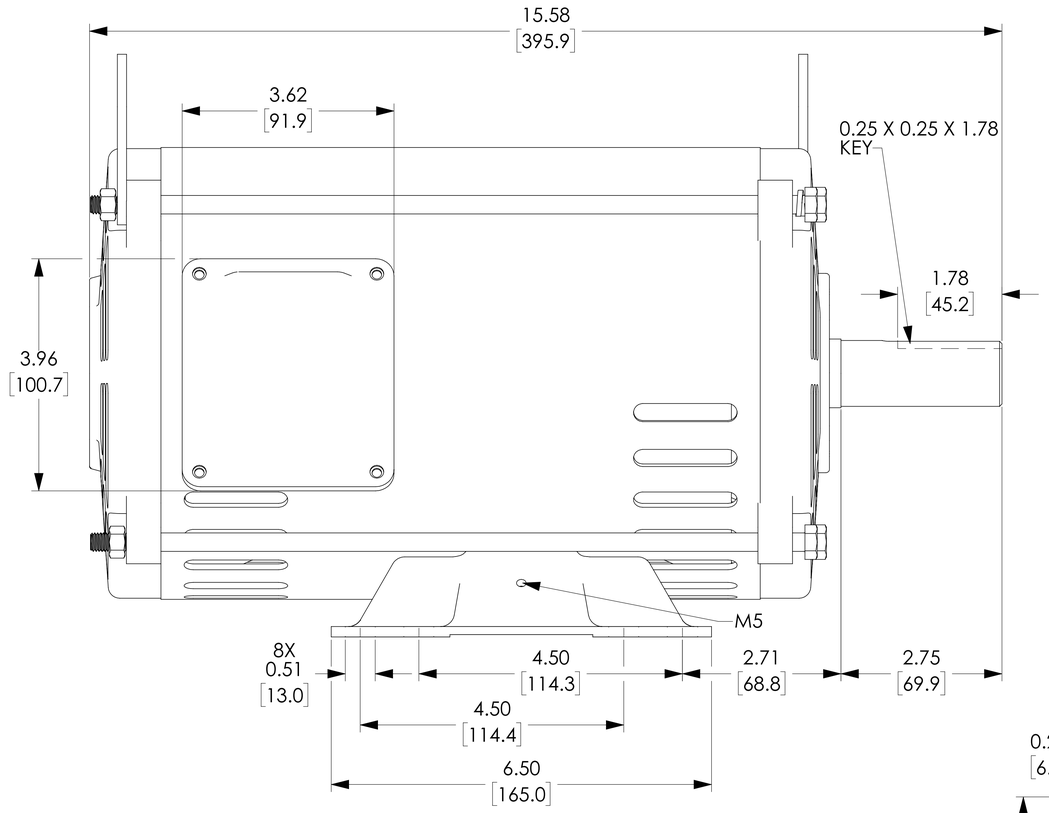

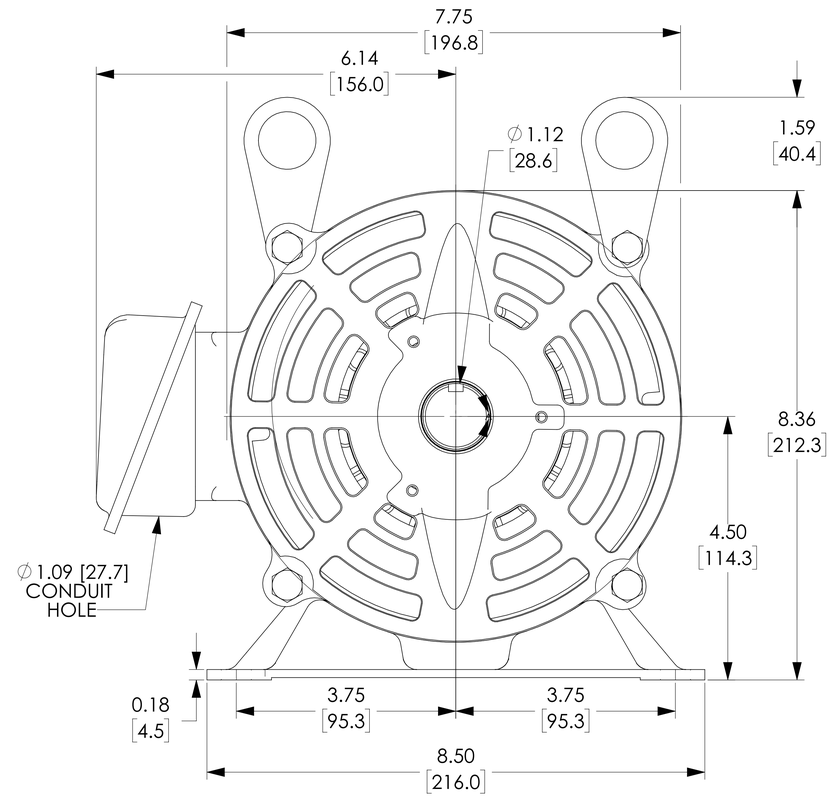

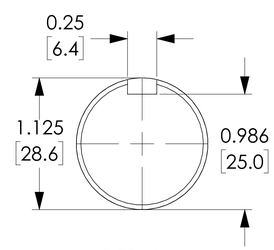

DETAIL A
SCALE 2 : 1

MTDP-003-3BD18

Units: inches [mm]
Scale: Full

IRONHORSE PREMIUM EFFICIENCY AC INDUCTION MOTOR, INVERTER DUTY, 3HP, 3-PH, 208-230/460 VAC, 1800RPM, ODP, 182T FRAME

AUTOMATIONDIRECT.com

NOTES:

1. DIMENSIONS CAN BE CHANGED BY MANUFACTURER WITHOUT NOTICE.
2. DIMENSIONS DO NOT IMPLY TOLERANCE.