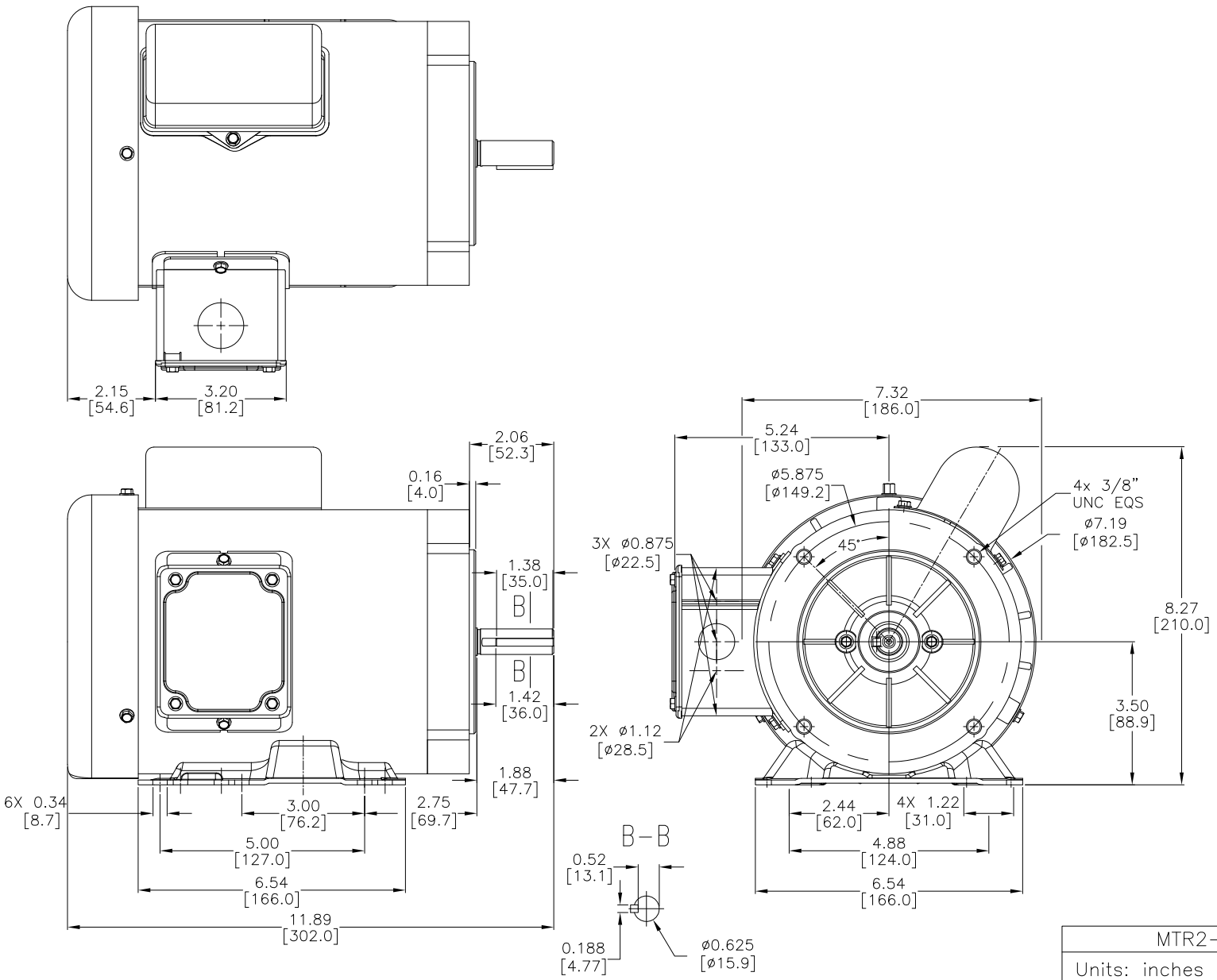


NOTES:

1. DIMENSIONS CAN BE CHANGED BY MANUFACTURER WITHOUT NOTICE.
2. DIMENSIONS DO NOT IMPLY TOLERANCE.

MTR2–P50–1AB18

Units: inches [mm]

Scale: Full

IRONHORSE STANDARD PERFORMANCE AC MOTOR, 1/2HP, 1PH, 115/230 VAC, 1800RPM, TEFC, 56C, C-FACE

AUTOMATIONDIRECT.com