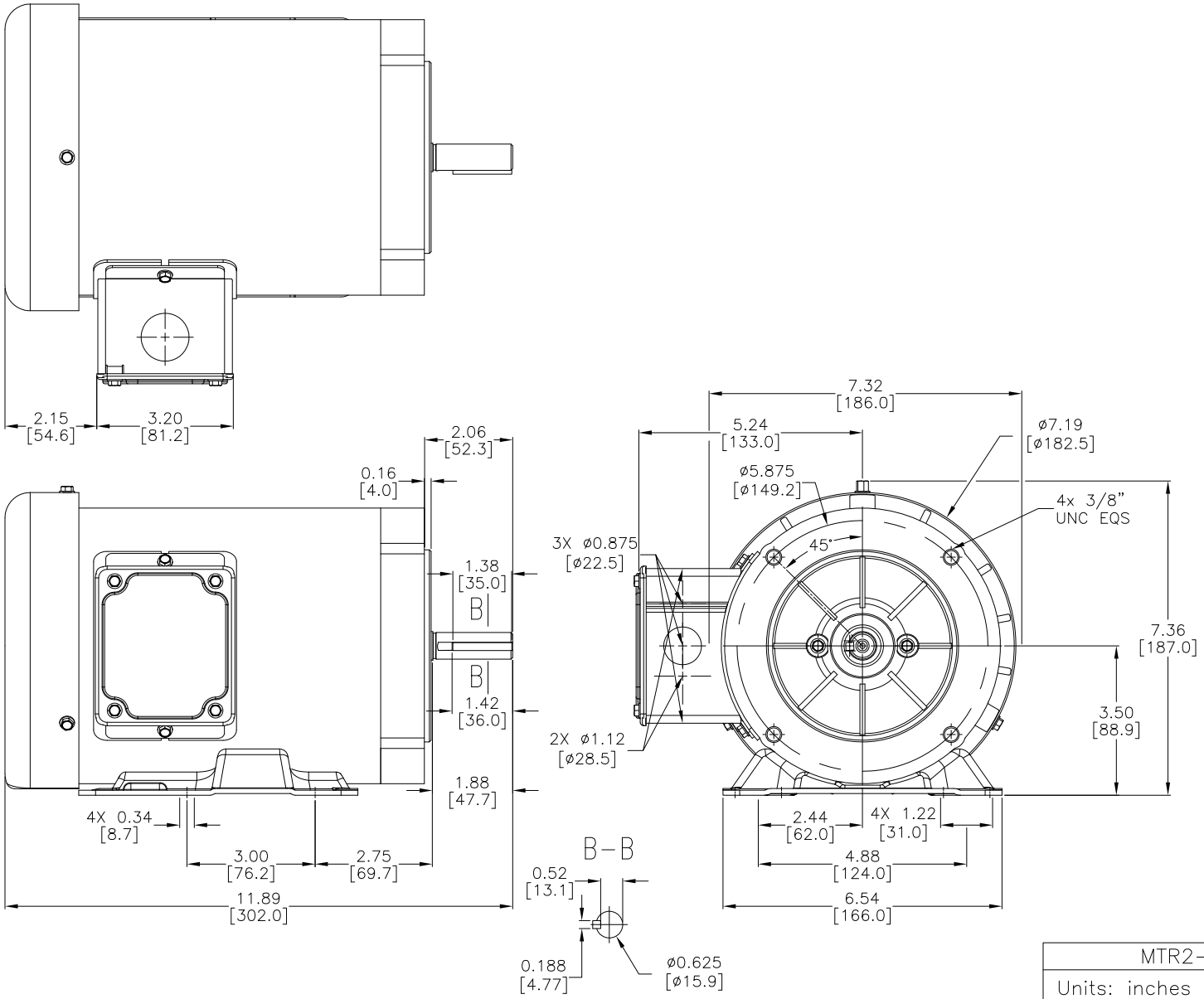

MTR2–P50–3BD36
Units: inches [mm]
Scale: Full
IRONHORSE STANDARD PERFORMANCE AC MOTOR, 1/2HP, 3PH, 230/460 VAC, 3600RPM, TEFC, 56C, C-FACE
AUTOMATIONDIRECT.com

NOTES:

1. DIMENSIONS CAN BE CHANGED BY MANUFACTURER WITHOUT NOTICE.
2. DIMENSIONS DO NOT IMPLY TOLERANCE.