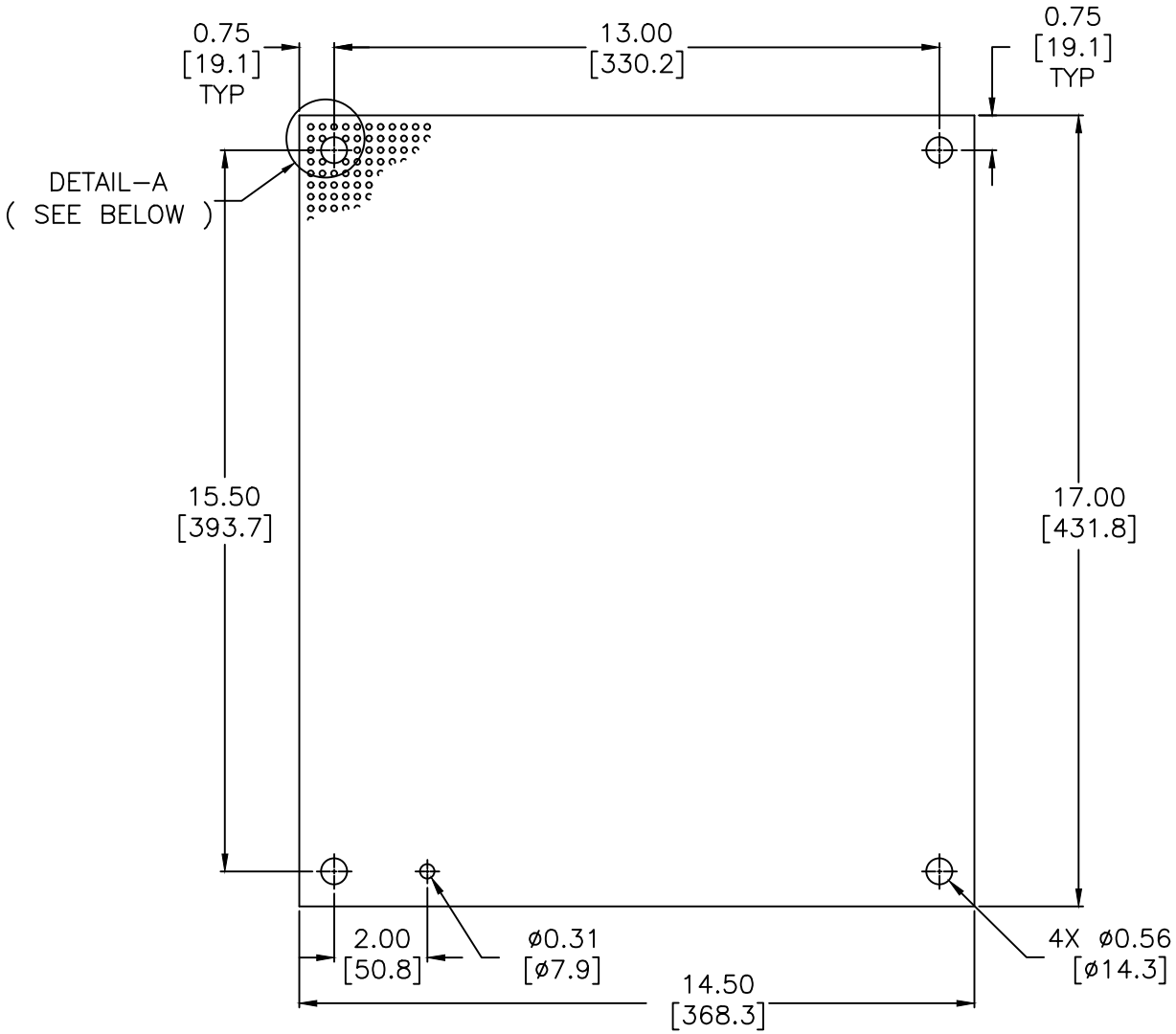

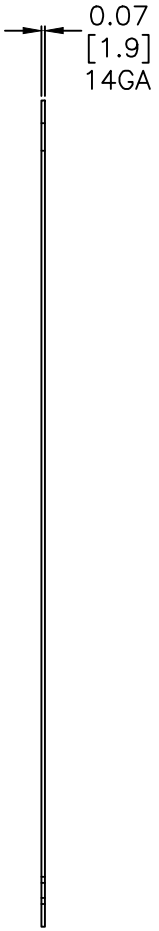

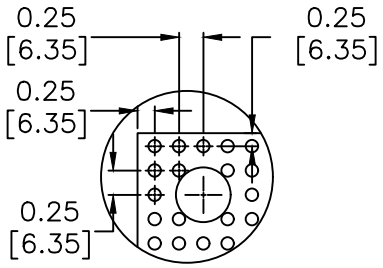

DETAIL–A
TYPICAL PERFORATION

NOTES:

1. DIMENSIONS CAN BE CHANGED BY MANUFACTURER WITHOUT NOTICE.
2. DIMENSIONS DO NOT IMPLY TOLERANCE.

N1P1620PP
Units: inches [mm] Scale: Full SUB PANEL, 17.00" x 14.50", 14 GAUGE, NEMA 1, PERFORATED, CRS CARBON STEEL AUTOMATIONDIRECT.com