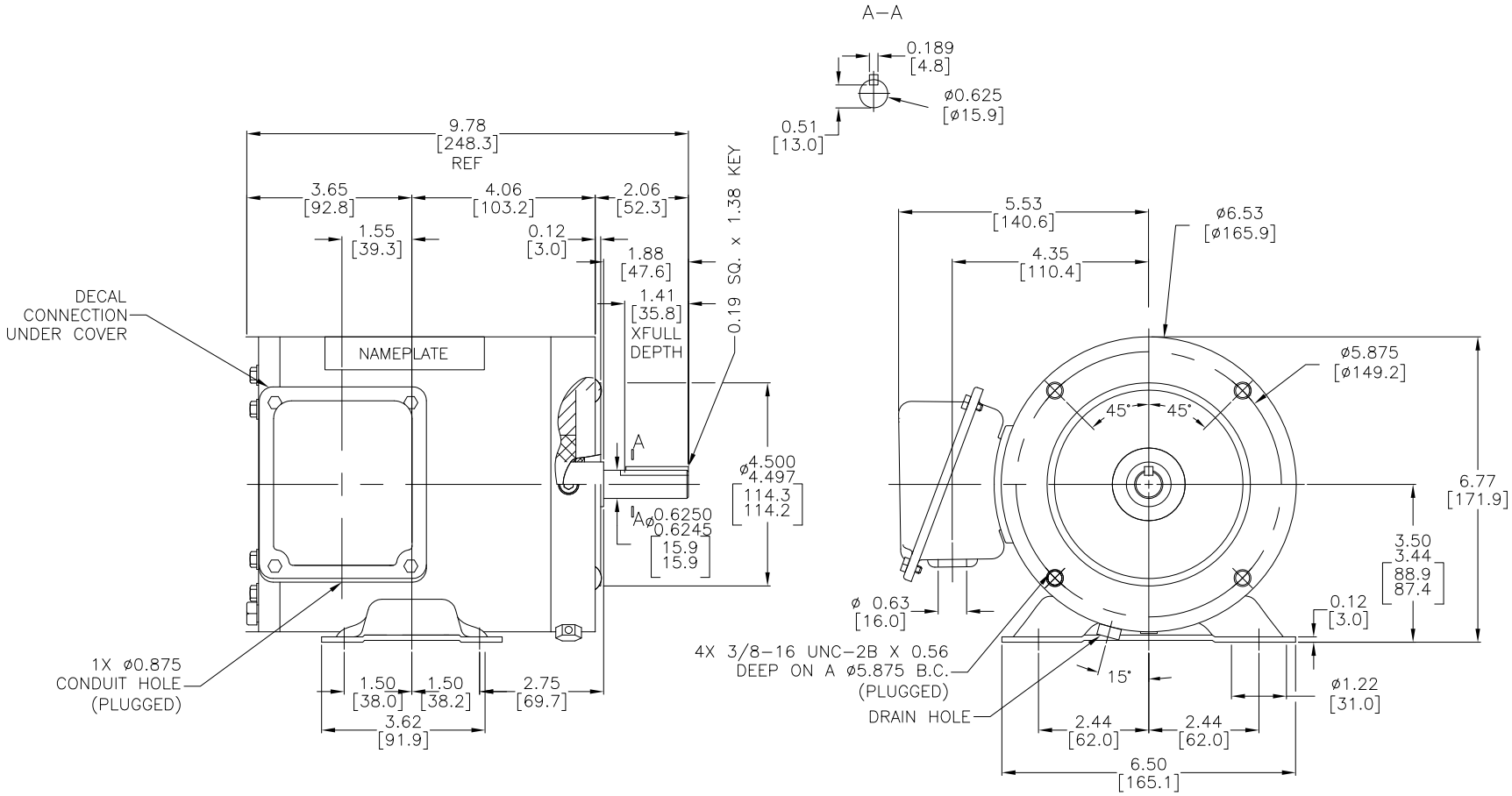

NOTES:

1. DIMENSIONS CAN BE CHANGED BY MANUFACTURER WITHOUT NOTICE.
2. DIMENSIONS DO NOT IMPLY TOLERANCE.

N451

Units: inches [mm]

Scale: Full

MARATHON AC INDUCTION MOTOR, GENERAL PURPOSE, 1/2 HP, 3-PH, 208-230/460 VAC, 3450 RPM, TENV, 56C FRAME, STAINLESS STEEL, RIGID BASE/C-FACE MOUNT

AUTOMATIONDIRECT.com