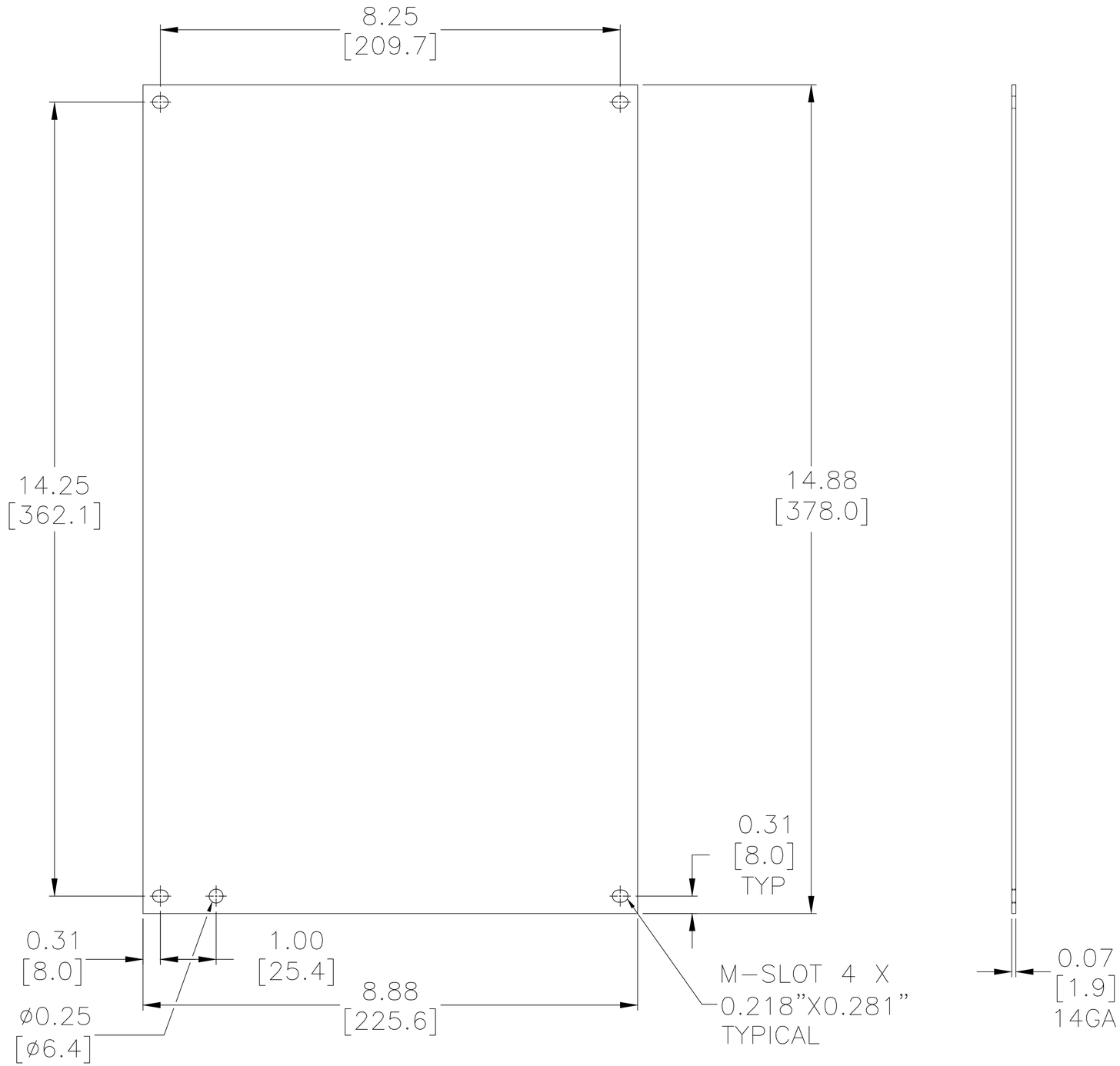

Notes:

1. Dimensions can be changed by Manufacturer without notice.
2. Dimensions do not imply tolerance.

P1610G

Units: inches [mm]

Scale: Full

SUB PANEL, 14.88" x 8.88", 14 GUAGE, GALVANIZED STEEL

AUTOMATIONDIRECT.com