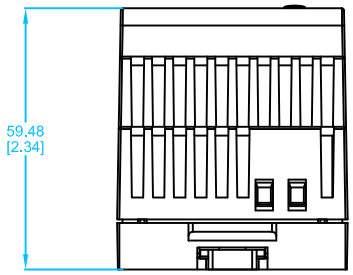

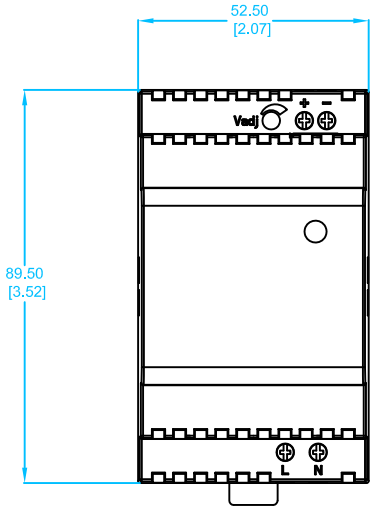

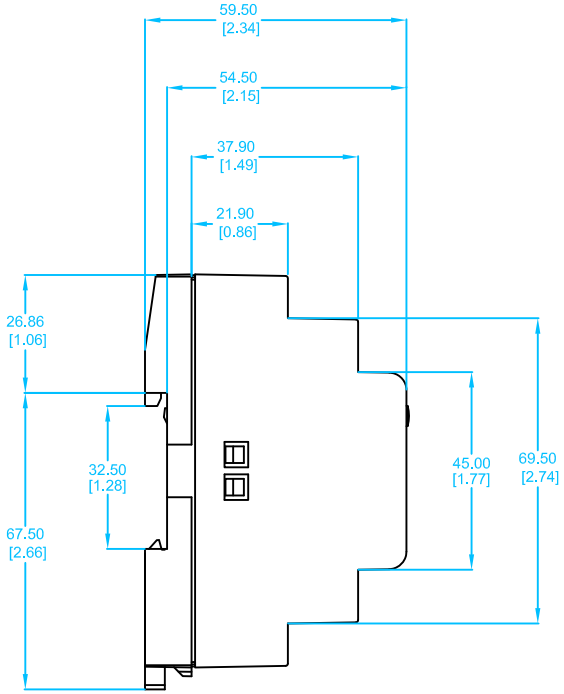

Tolerances: ±0.5 mm [±0.02]

PSC-24-030
Units: [Inches] mm Scale: Full PSC-24-030 AUTOMATIONDIRECT