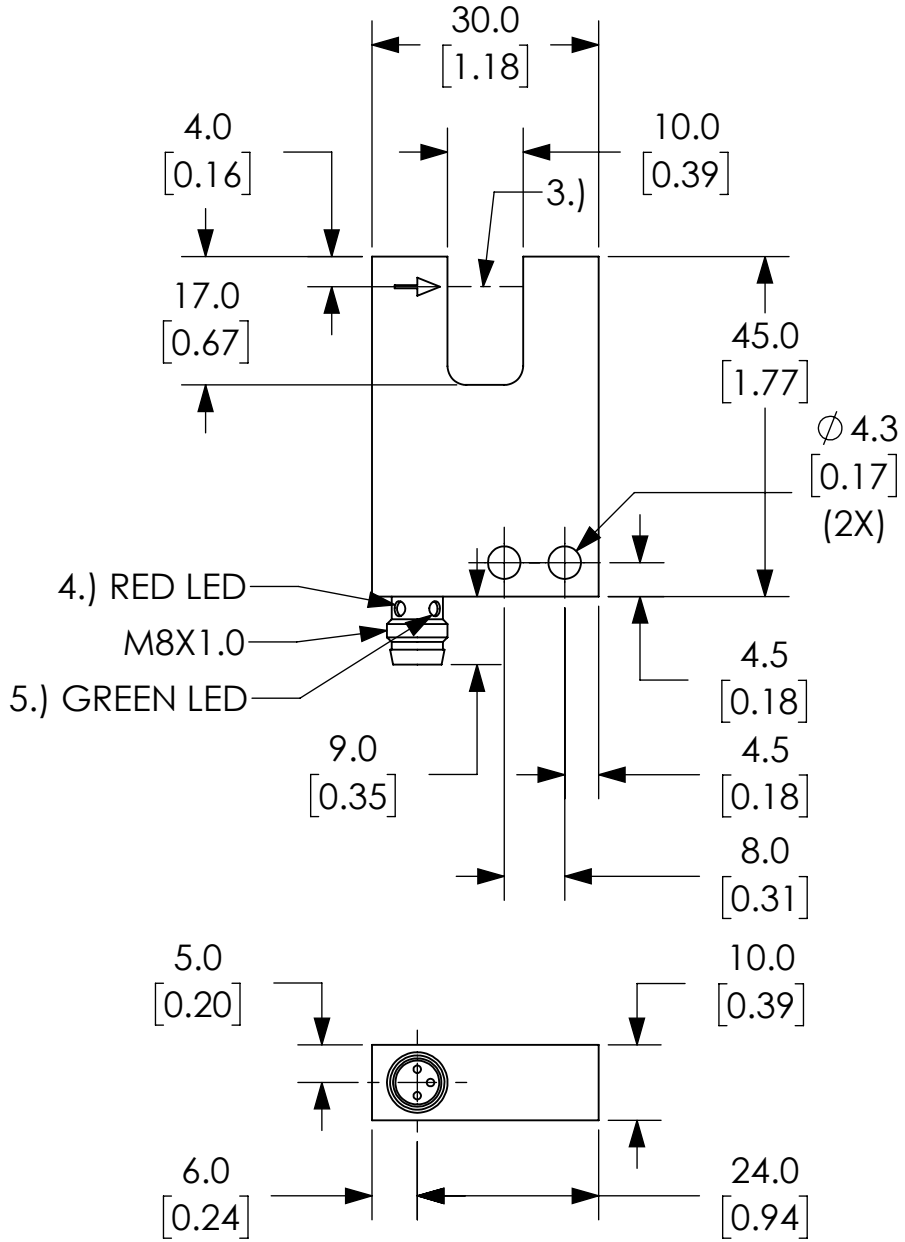

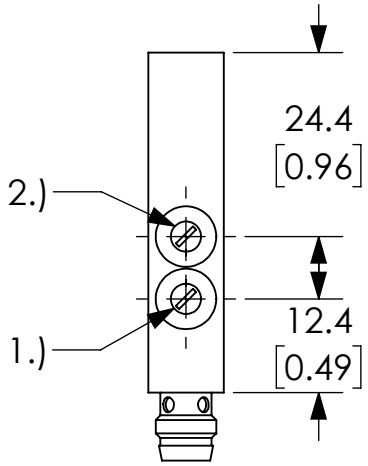

GENERAL INFORMATION

1.) SENSITIVITY
2.) LIGHT-ON / DARK-ON
3.) OPTICAL AXIS
4.) OUTPUT FUNCTION
5.) OPERATING VOLTAGE

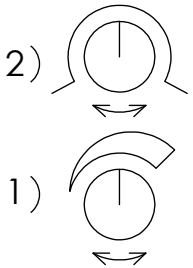

NOTES:

1. DIMENSIONS CAN BE CHANGED BY MANUFACTURER WITHOUT NOTICE.

2. DIMENSIONS DO NOT IMPLY TOLERANCE.

PSUI-0N-2F

Units: mm [inches]

Scale: Full

PHOTOELECTRIC SENSOR, 30MM X 54MM X 10MM, 0-10MM RANGE, NPN

AUTOMATIONDIRECT.com