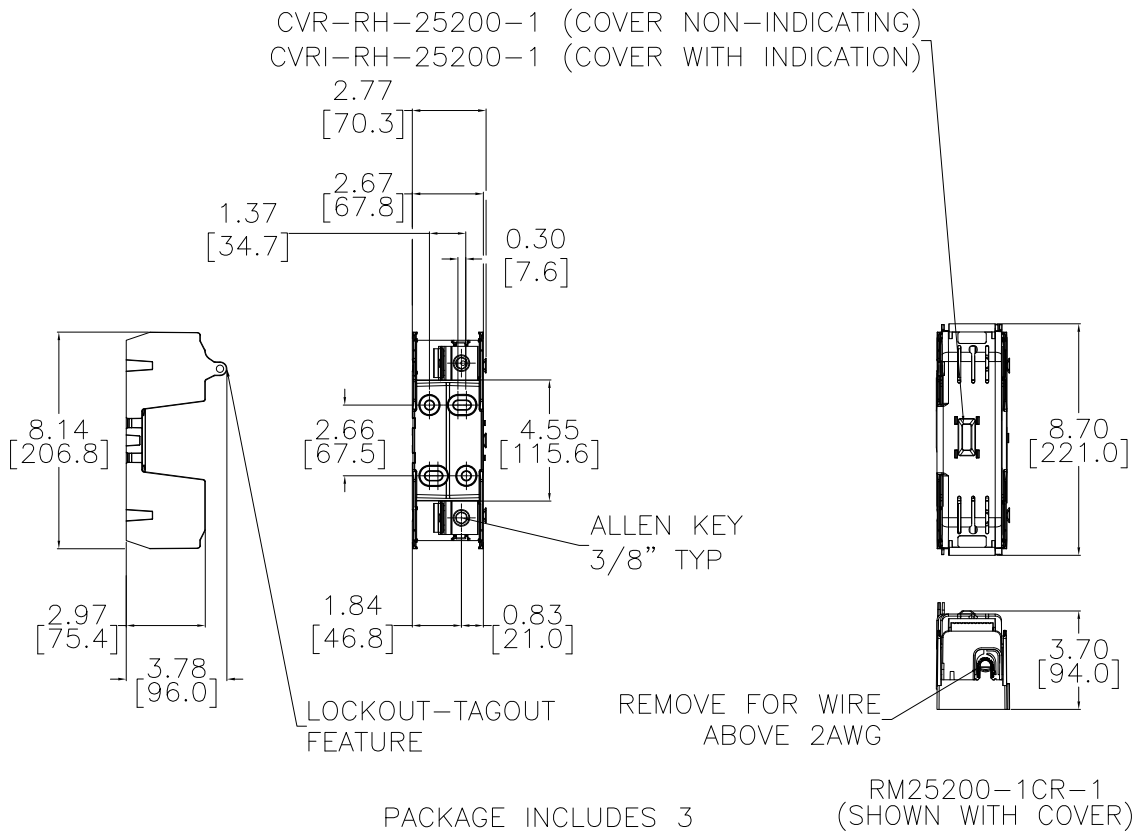

NOTES:

1. DIMENSIONS CAN BE CHANGED BY MANUFACTURER WITHOUT NOTICE.
2. DIMENSIONS DO NOT IMPLY TOLERANCE.

RM25200–1CR–3

Units: inches [mm]

Scale: Full

FUSE BLOCK, MODULAR, 200A,
250V CLASS R, 1-POLE

AUTOMATIONDIRECT.com