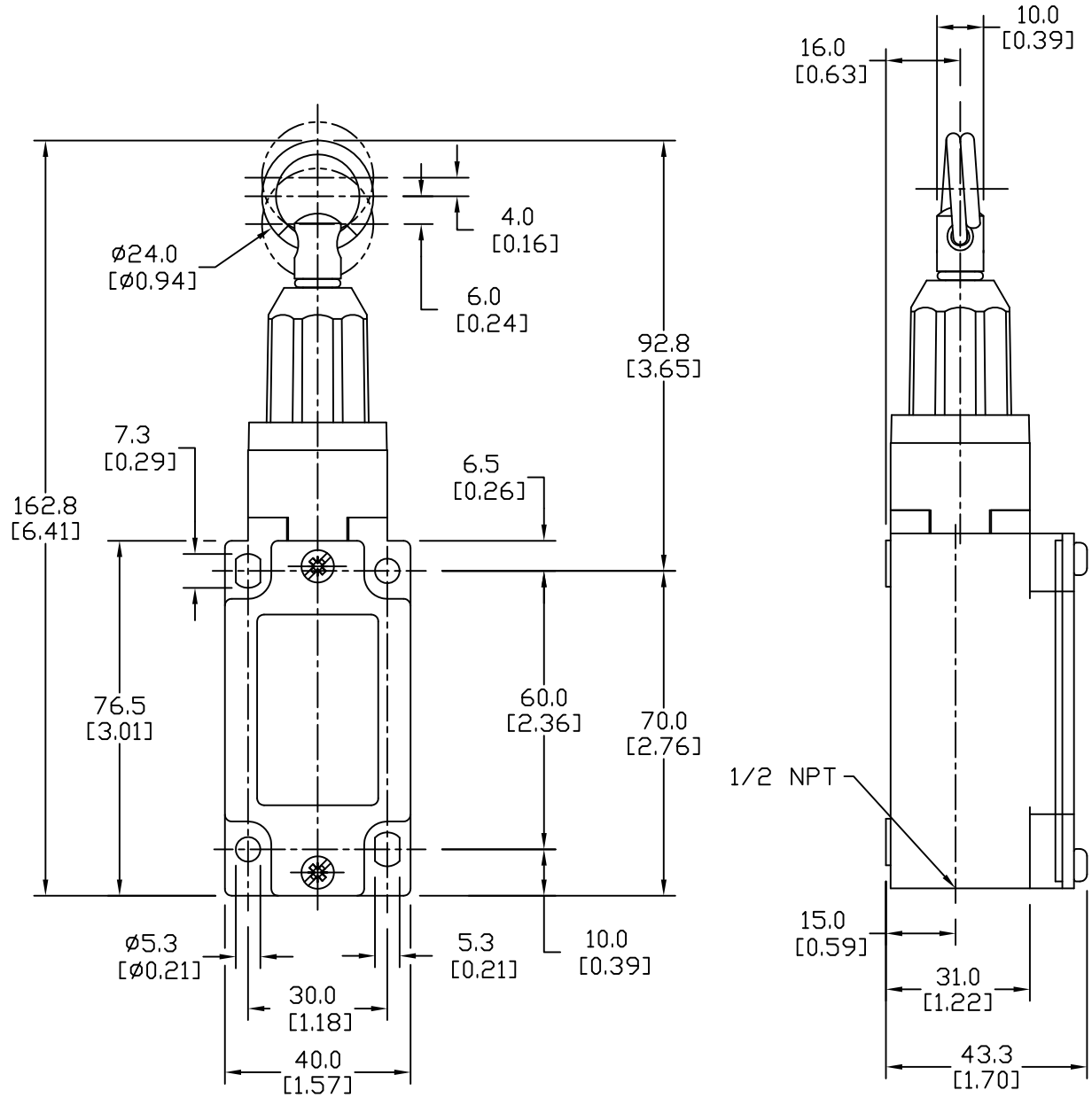

SBM2K97X12

Units: mm [inch]

Full Scale

SAFETY SWITCH,
CABLE-PULL, NO RESET,
1NO & 2NC, 40MM, METAL

AUTOMATIONDIRECT.com