SAGINAW CONTROL & ENGINEERING
SCE-47XVR2514

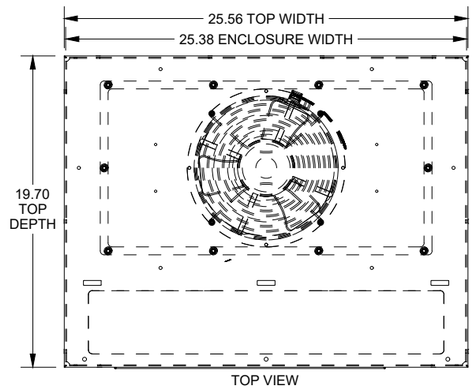

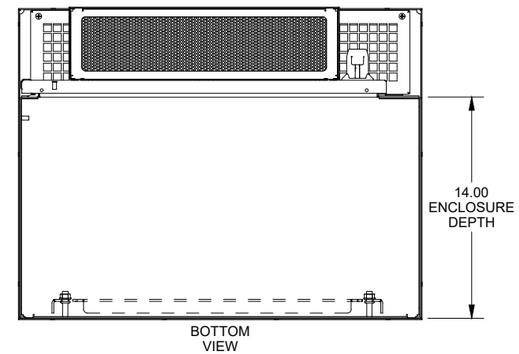

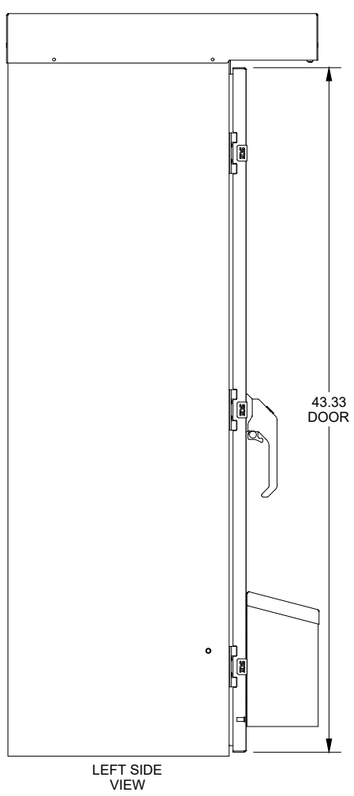

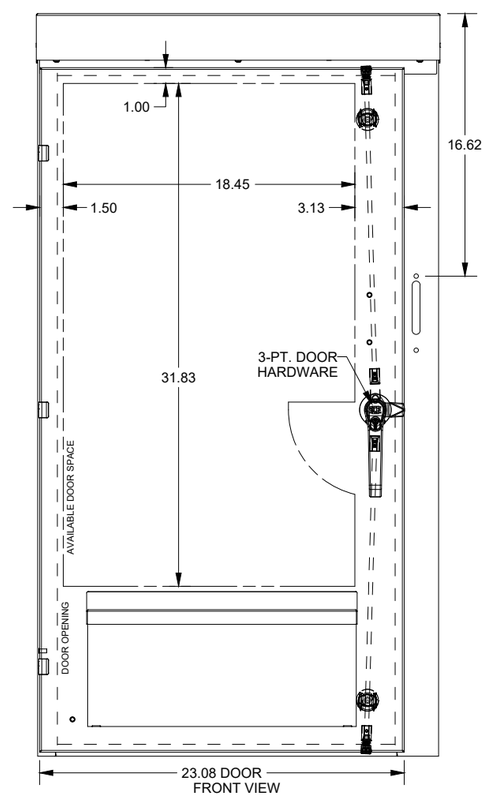

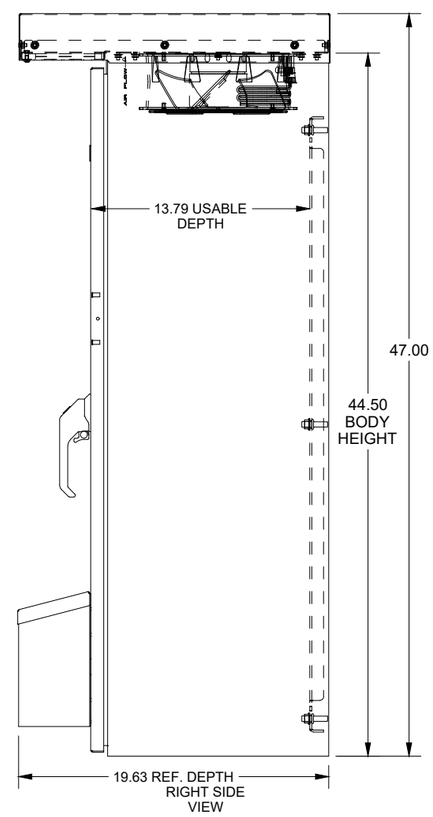

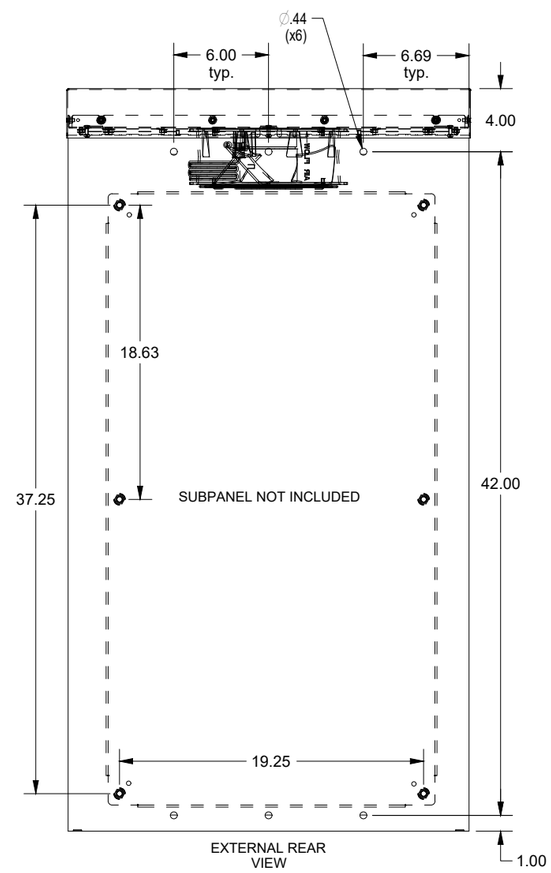

DATA SUBJECT TO CHANGE WITHOUT NOTICE