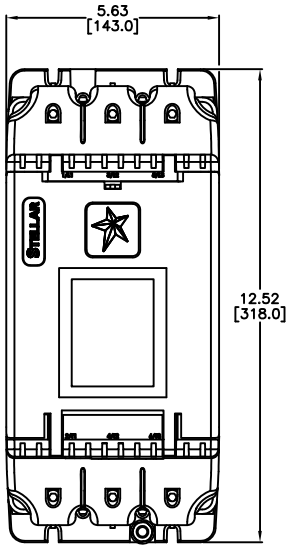

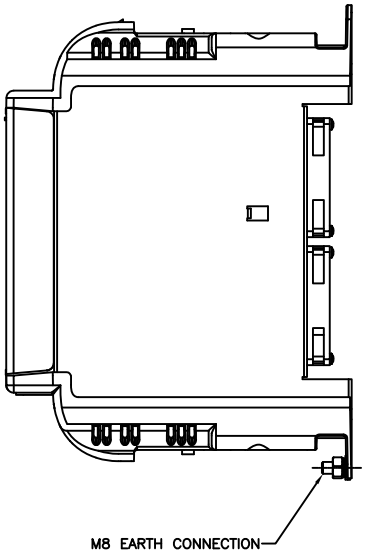

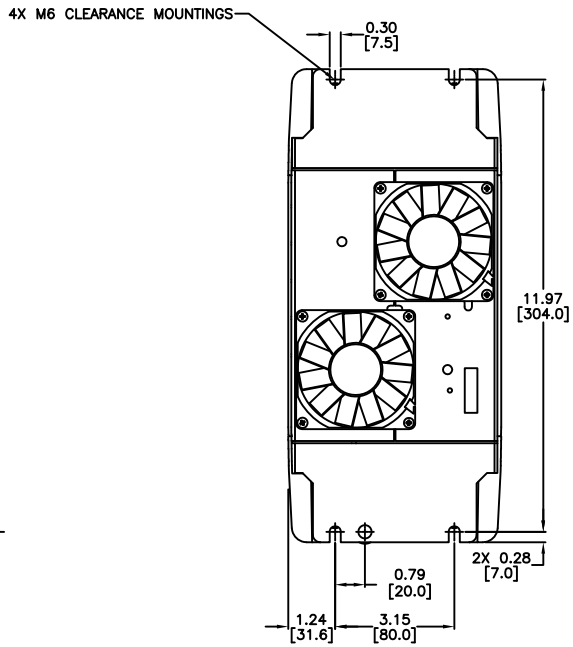

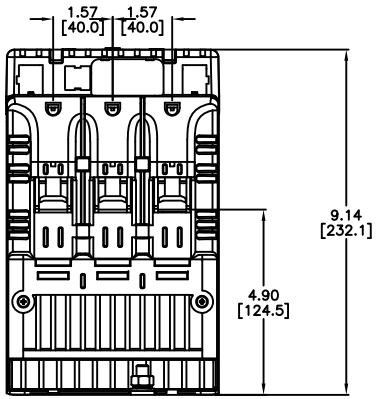

Notes:
1. Dimensions can be changed by Manufacturer without notice.
2. Dimensions do not imply tolerance.

SR55–156
Units: inches [mm]
Scale: Full
FULL FEATURED SOFT STARTER, 156A, 200-480VAC, 3 PHASE
AUTOMATIONDIRECT.com