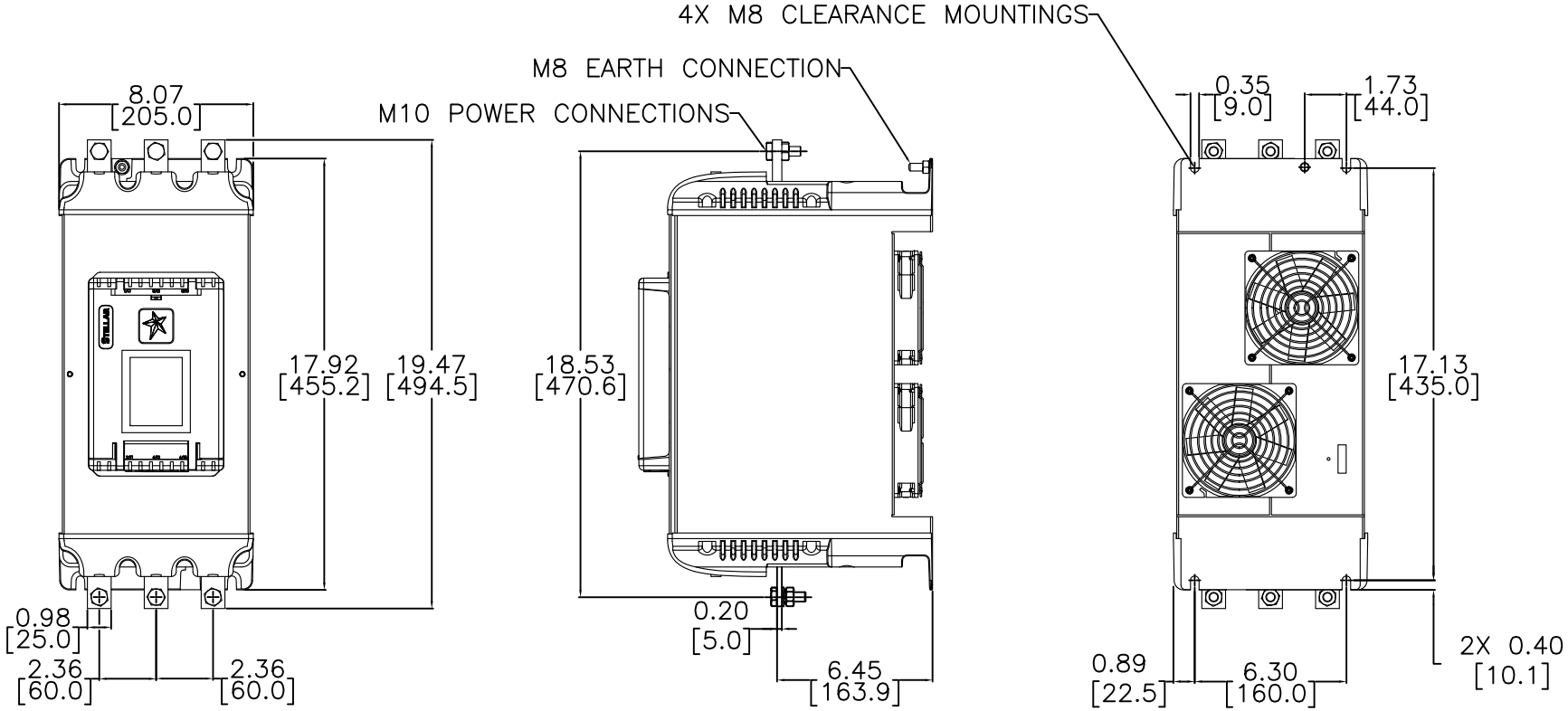

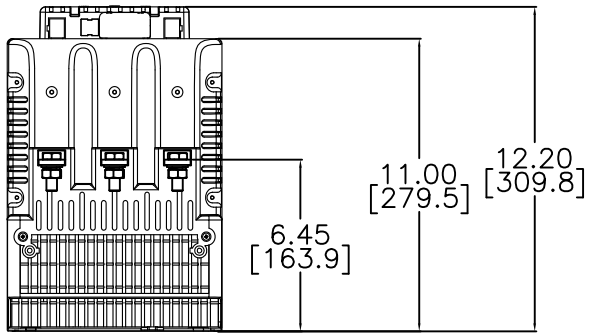

Notes:
1. Dimensions can be changed by Manufacturer without notice.
2. Dimensions do not imply tolerance.

SR55–361

Units: inches [mm]

Scale: Full

FULL FEATURED SOFT STARTER, 361A, 200-480VAC, 3 PHASE

AUTOMATIONDIRECT.com