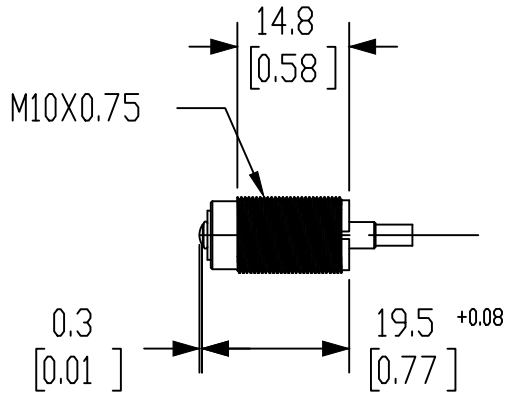

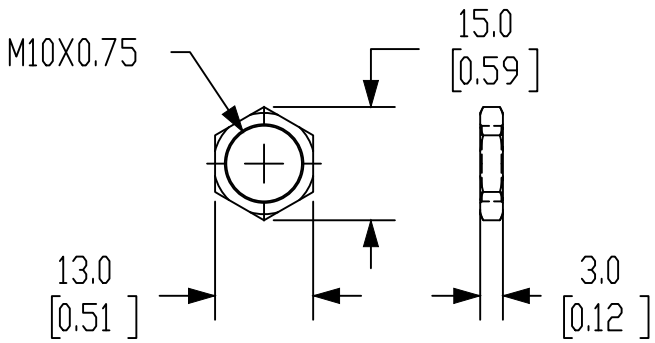

NOTES:

1. DIMENSIONS CAN BE CHANGED BY MANUFACTURER WITHOUT NOTICE.

2. DIMENSIONS DO NOT IMPLY TOLERANCE.

STM82A-HT2

Units: mm [inches]
Scale: Full

STOPPER LIMIT SWITCH: 10MM DIAMETER, 3MM PLUNGER WITH BOOT

AUTOMATIONDIRECT.com