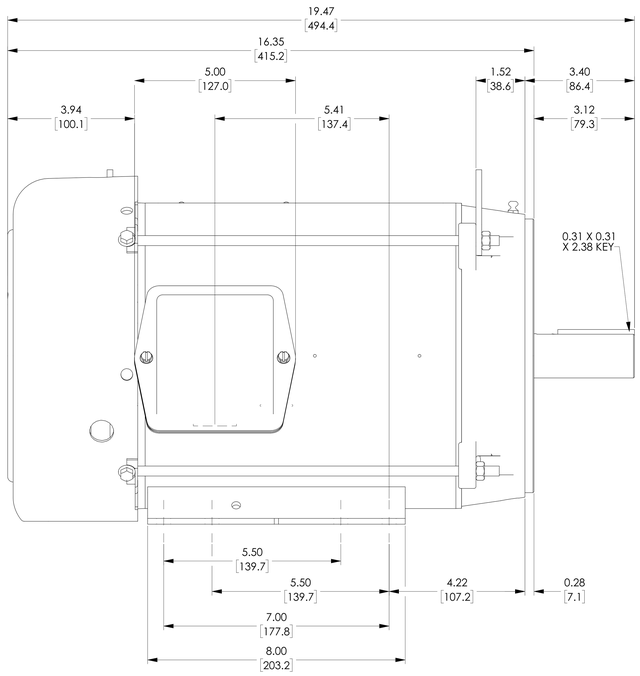

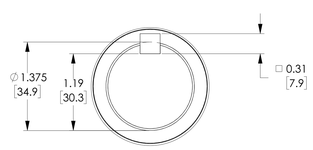

DETAIL A
SCALE 2 : 1

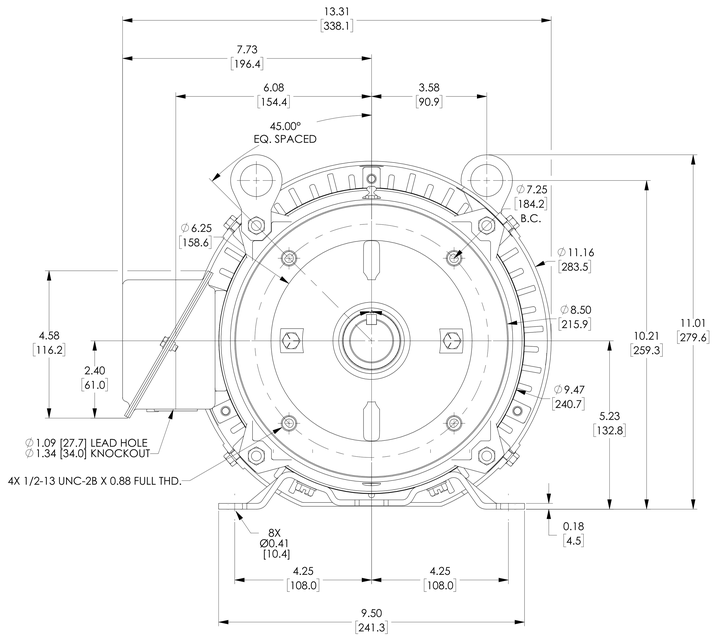

NOTES:

1. DIMENSIONS CAN BE CHANGED BY MANUFACTURER WITHOUT NOTICE.
2. DIMENSIONS DO NOT IMPLY TOLERANCE.

SY068

Units: inches [mm]
Scale: Full

MARATHON SYMAX SERIES SUPER PREMIUM EFFICIENCY AC PERMANENT MAGNET MOTOR, HIGH-PERFORMANCE INVERTER DUTY, 7.5HP, 3-PH, 1800 RPM, 230/460 VAC, 213TC FRAME, TEFC

AUTOMATIONDIRECT.com