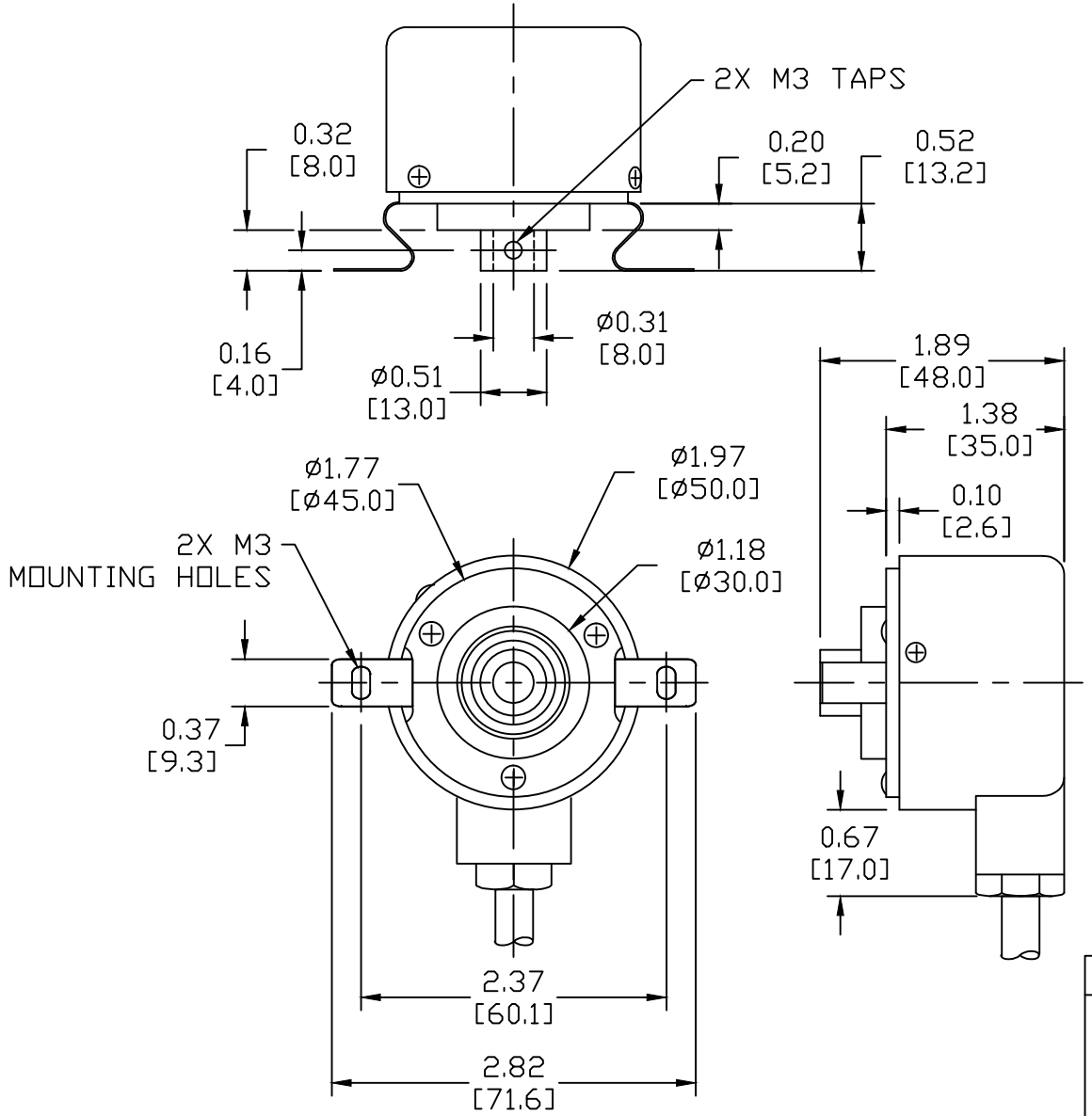

TRD–NH2000–RZWD

Units: inches [mm]

Scale: Full

MEDIUM DUTY INCREMENTAL ENCODER
8mm HOLLOW SHAFT, 2000 PPR
5-30 VDC, PUSH-PULL OUTPUT

AUTOMATIONDIRECT.com