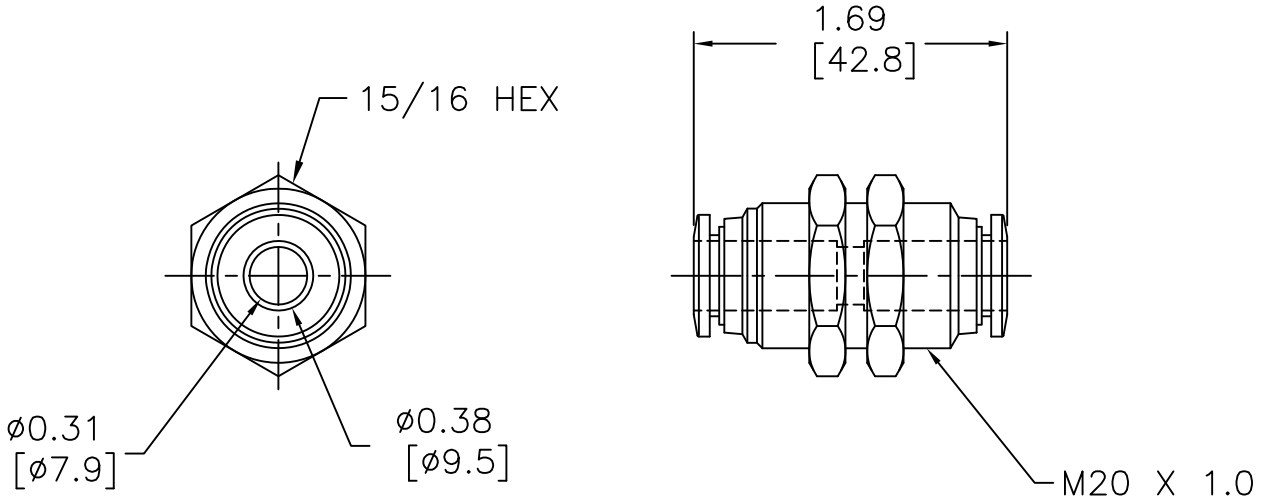

UB38
Units: inches [mm] Scale: Full UNION, BULKHEAD, 3/8 AUTOMATIONDIRECT.com