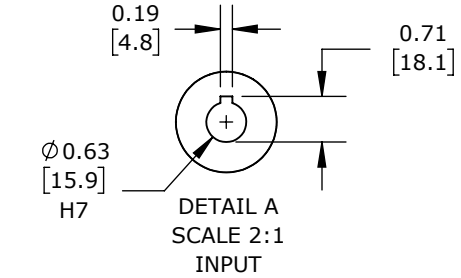

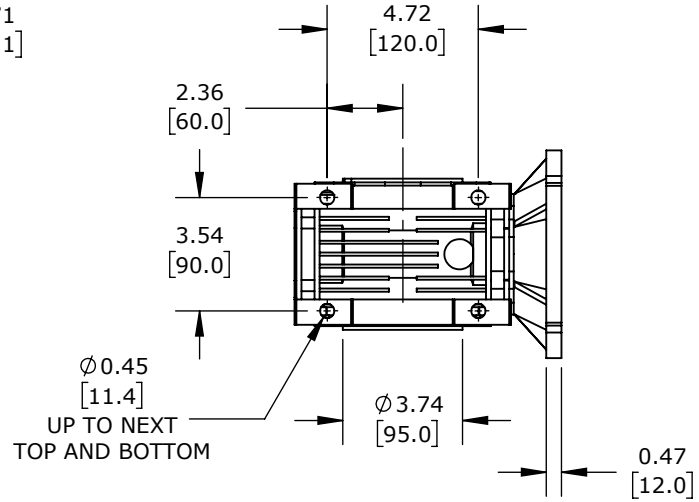

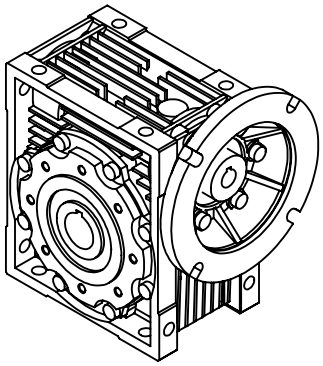

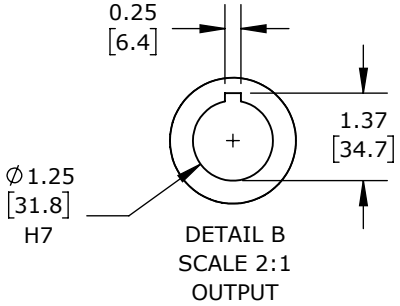

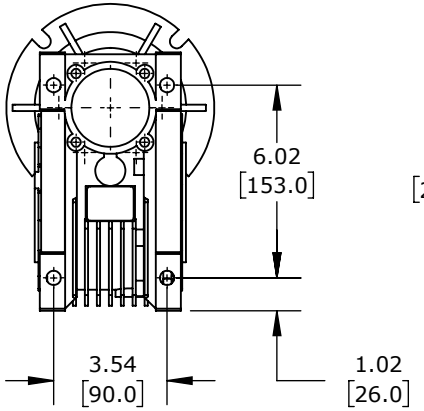

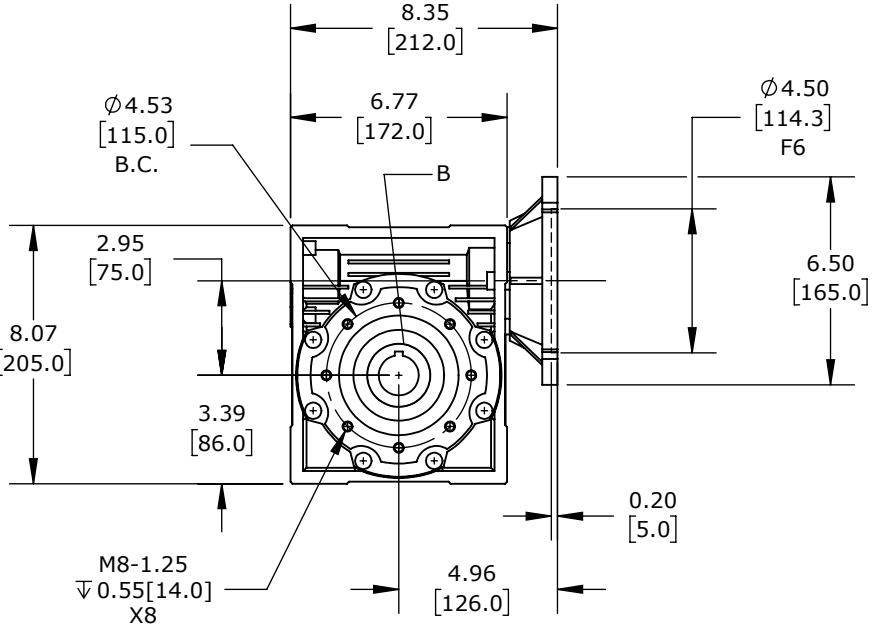

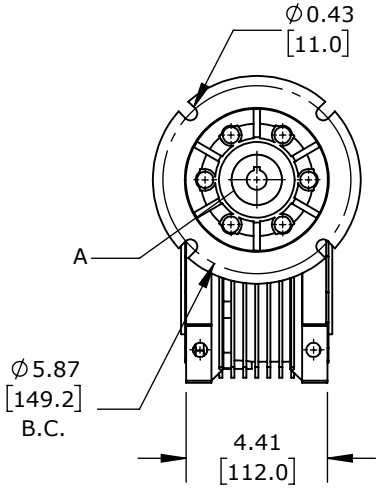

IRON HORSE ALUMINUM GEAR REDUCER-56C-100:1			WGA-75M-100-H1			AutomationDirect.com 1-800-633-0405
3rd ANGLE	NOT TO SCALE	PART DIMENSIONS MAY DIFFER SLIGHTLY DUE TO MANUFACTURER'S VARIANCES	INCH UNITS USED FOR PART DESIGN	UNLESS OTHERWISE SPECIFIED UNITS ARE:	**inch [mm]**	LATEST VERSION 3/8/2023	SHEET 1 OF 1