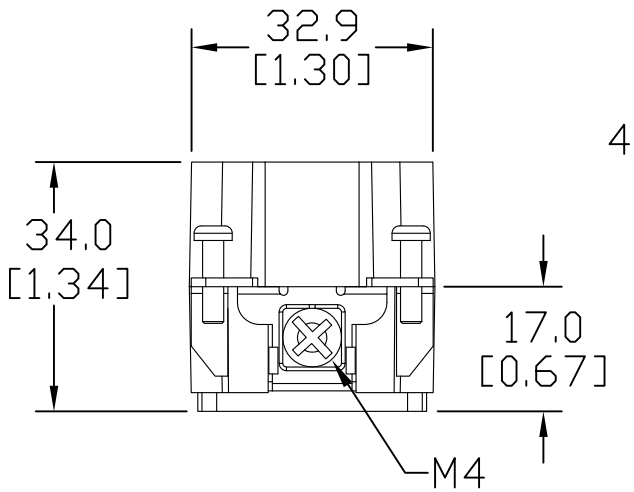

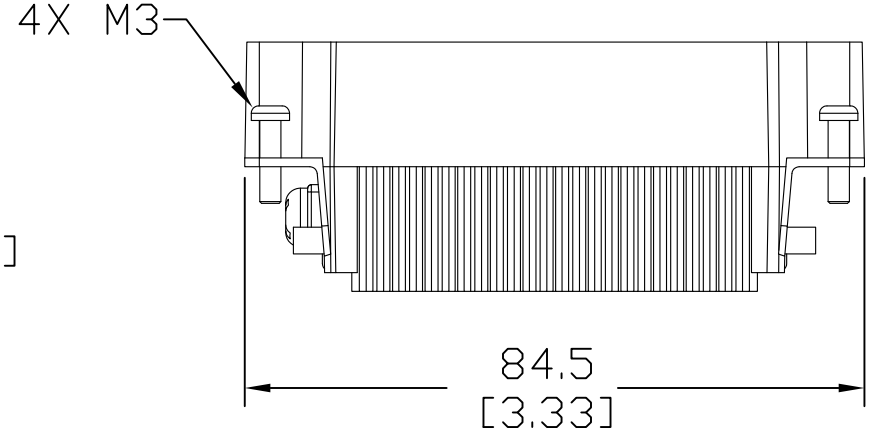

WIRE
TERMINATION
SIDE

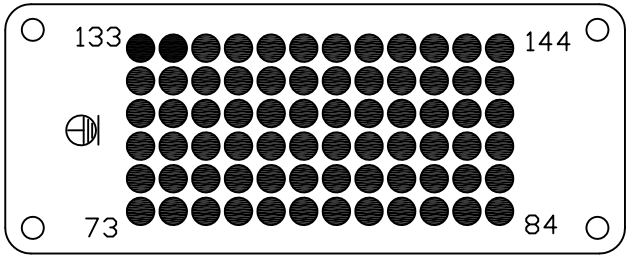

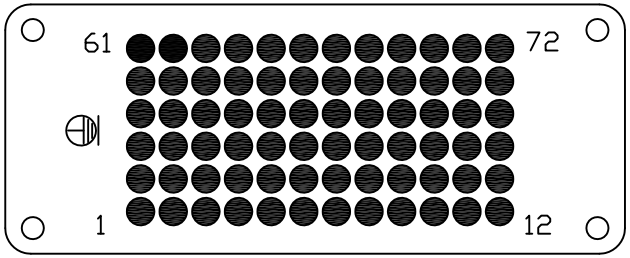

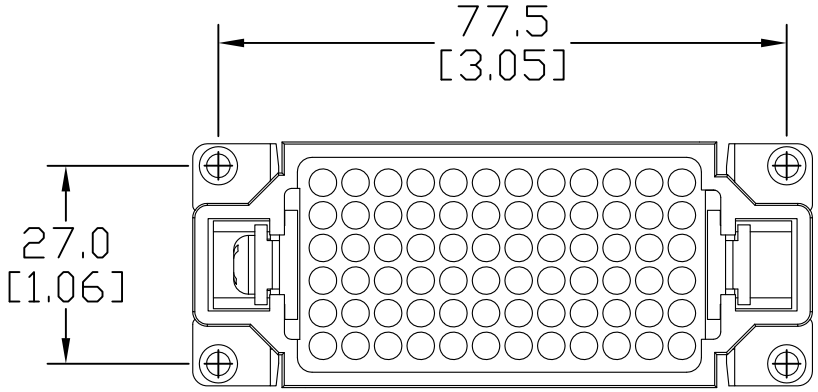

ZP–MC16B–1–FC072–2

Units: mm [inches]

Scale: Full

INSERT, 10A,
72-POLE, MALE, CRIMP,
600 VAC/DC, 10 AMP

AUTOMATIONDIRECT.com